APPLEBOX

the alpha syntauri system
a ancient synthisizer concept for the Apple II

General Overview

In the beginning of the 80´s electronics also entered the scene of making music. The very first electronic devices of making soundwaves and strange audiowaves with electronical equipment came into the market and first descriptions of different kinds of wavegenerators got published in various kinds of electronic magazins. Some of them are here present as own contribution pages at the indexpage. I´d just mention here the very first publication of the "Formant" in the magazin "elektor" and the few years later first time published concept of the polyphonic Synthisizer "POLYSYNTH" in the magazin "Elrad" just to name the basic entering to that topic here in Europe.

The first parts of equipment that entered the stage by using at the beginning analog electronic design came from companies like Moog and Roland. Of course there have been some companies existing that made "electronic organs" but their concept was restricted in those days to analog design of sinewave generators with transistors.... - the very new thing in the beginning of the 80´s was that now the technology presented very new sounds to the ear by designing sawwave, rectangularwaves and trianglewaves too and very shortly after also a mix of "enveloping concepts" by modulating a sawwave or sinewave with rectangular or triangular modulation waves. That was the point where the so called "Synthisizers" started the adventure of creating new sounds that have never been heard before....

Various new young musicians started creating very new sounds seeking for a new "band identity" hunting for new audiowaves to make the sound of the band that unique, that it could not be copied by any other band..... Just to name a few of this famous musicians Kieth Emerson from Emerson, Lake and Palmer, Alan Parson fron Alan Parson Project, and other Groups like Pink Floyd and YES - not to forget a lot of musicians from the taste of Jazz like Herbie Hancock and of course Miles Davis. In the mid 80´s for the Apple II the 2 most well known concepts for making music with the Apple II have been the DIY project from "ct" an electronic magazin with the description of the "ct Klangcomputer" (in engl. "ct soundcomputer") and the alpha syntauri. In fact while the "ct Klangcomputer" was a complete design with all related interface cards - the alpha syntauri was in fact a mix from various sources: The organlike keyboard and its interface came from alpha syntauri, while the interfacecards for making the sound originated from the company Mountain Computer and was sold as "Mountain Computer Music System". With both components together and an Apple II or Apple IIe a musician was upfront of a complex synthisizer system which permited to generate nearly every kind of sound from the Apple II series of computers.
The two persons upmost involved to the development of the alpha syntauri system have been Charlie Kellner and Ellen Lapham. In 1984 the company shut off business. An interview with Ellen Lapham introducing the alpha syntauri and explaining the concept is viewable at the computer chronicles - a video that can be viewed from the internet.

While the entire publication of the ct Klangcomputer is here availiable at another series of pages in the chapter of pages we´ll take a very closer look to the entire system with the alpha syntauri and the Mountain Computer Music System with strong focus to the technical side and reverse engineering of this entire system. The reason for this, is the fact that the documantation of the components is quite well for using the system, but if things go wrong and one of the components needs repair or service due to it´s age the documentation turns out to be a desert in the technical side bearing the lack of not containing any kind of technical information like circuitplans or pictures of vital parts of the components and desciption how this part interact with eachother.....

This shall be solved here and the target is to provide the entire missing part of the manuals by reverse engineering the system that far that a technician can check the system for correct function and in case of need carry out a service task or repair such a system and get it back to working condition and finally also to provide a downloadable document containing the circuitplans and vital information about the system far beyond the documentation provided in the ancient days with the manuals of that components.

And besides it´s also a target of this pages to present the components in working order and with pictures to teach several details about the system and how it´s working.

So lets start here first with the alpha syntauri keyboard itself and some pictures of it in general and in detail.

Here is the entire System:

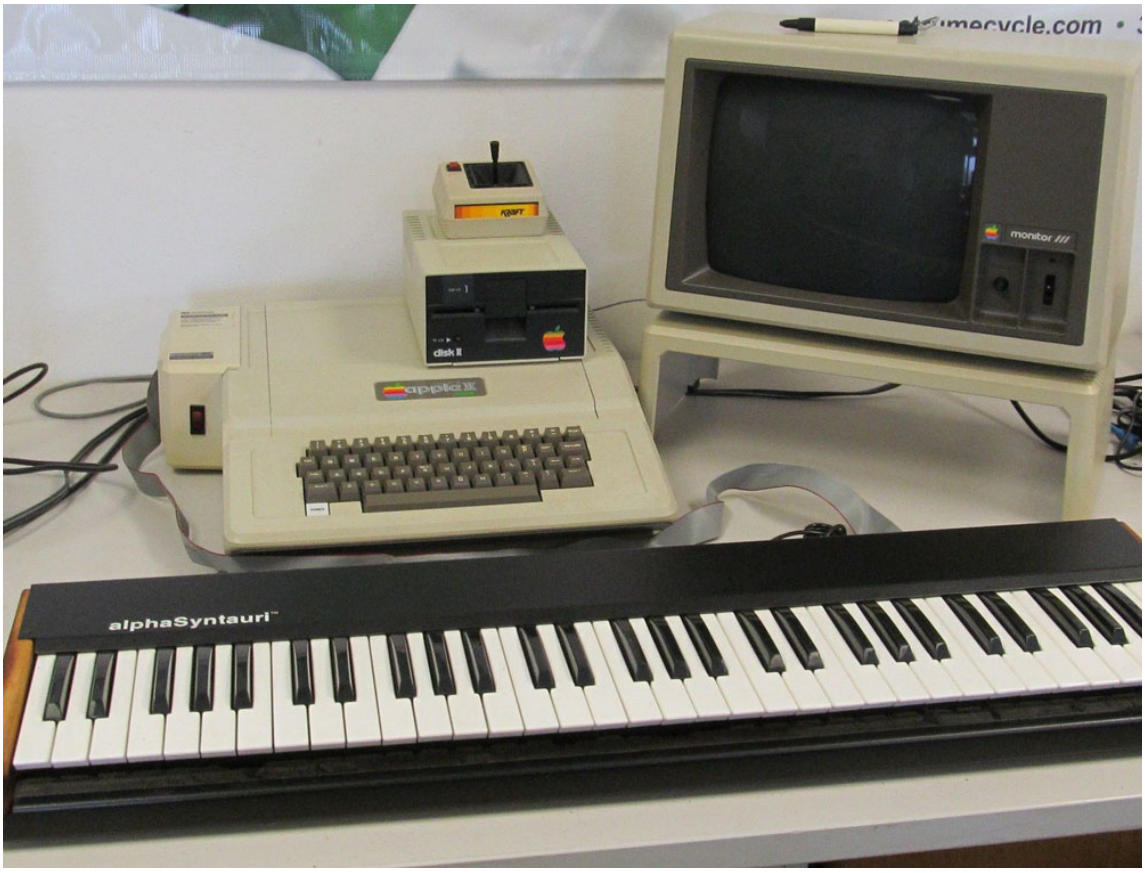
umecycle.com
KRAFT
disk II
apple II
monitor ///
alphaSyntauri™

Here is the view to the system components inside of the Apple II:

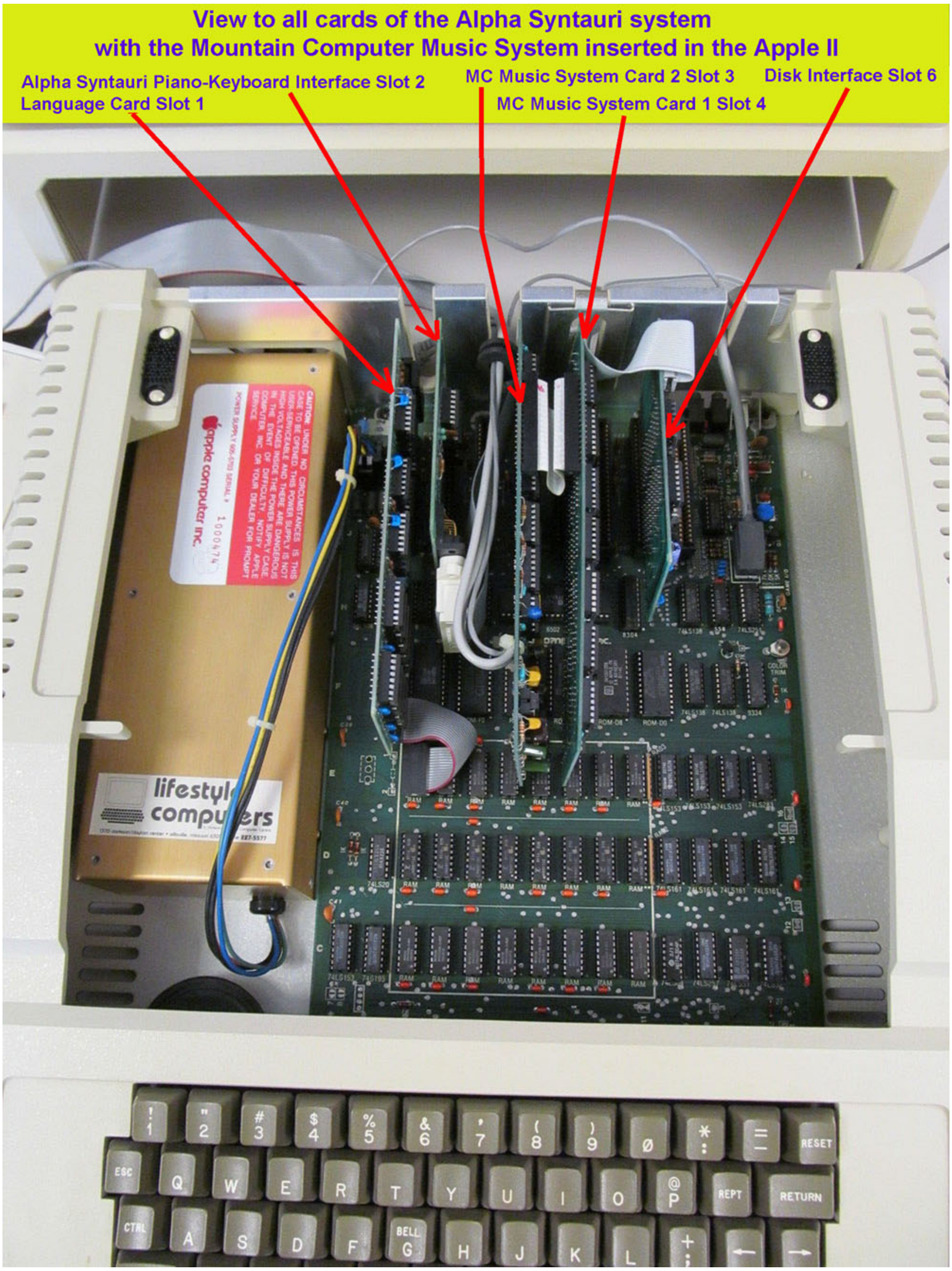
View to all cards of the Alpha Syntauri system
with the Mountain Computer Music System inserted in the Apple II
Alpha Syntauri Piano-Keyboard Interface Slot 2
Language Card Slot 1
MC Music System Card 2 Slot 3
MC Music System Card 1 Slot 4
Disk Interface Slot 6
apple computer inc.
lifestyle computers
RESET
ESC
REPT
RETURN
CTRL
BELL

Here is the view to the external Alpha Syntauri components only:

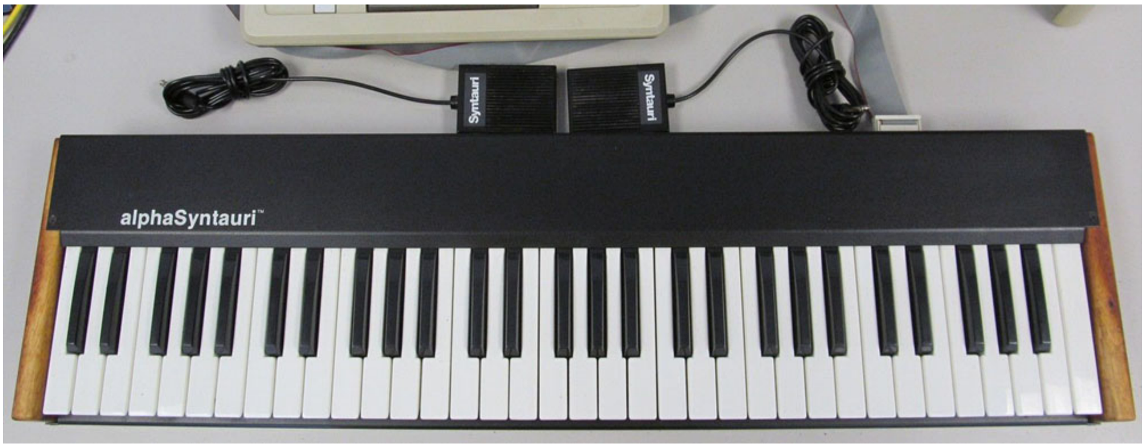
Syntauri
Syntauri
alphaSyntauri™

and here is the picture of the Interfacecard of the Alpha Syntauri (which is located inside of the Apple II) from componentside:

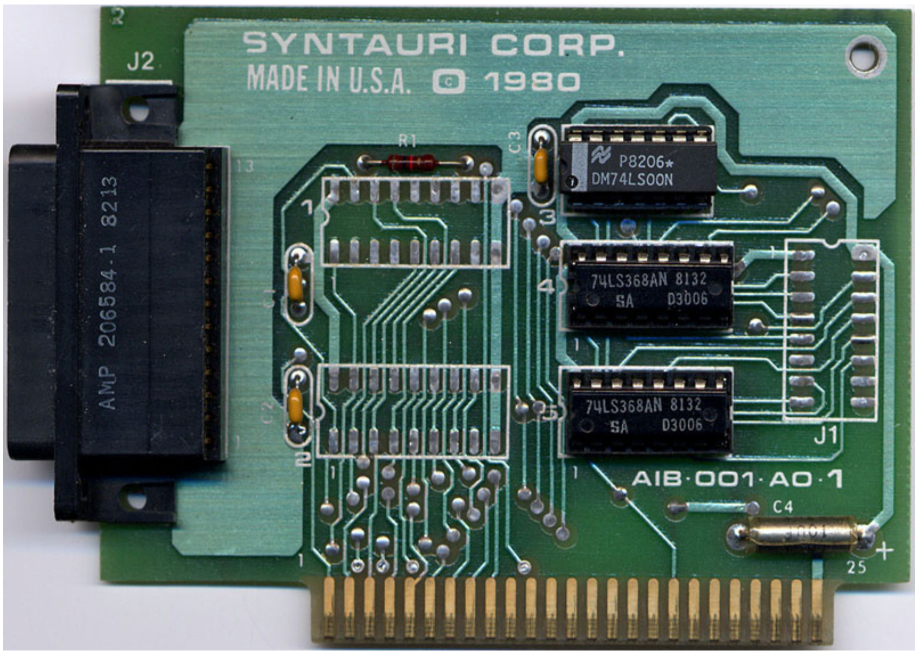
SYNTAURI CORP.
MADE IN U.S.A. © 1980
J2
AMP 206584-1 8213
P8206
DM74LS00N
74LS368AN 8132
74LS368AN 8132
J1
AIB·001·A0·1
C4
25

and here is the picture of the Interfacecard of the Alpha Syntauri (which is located inside of the Apple II) from solderingside:

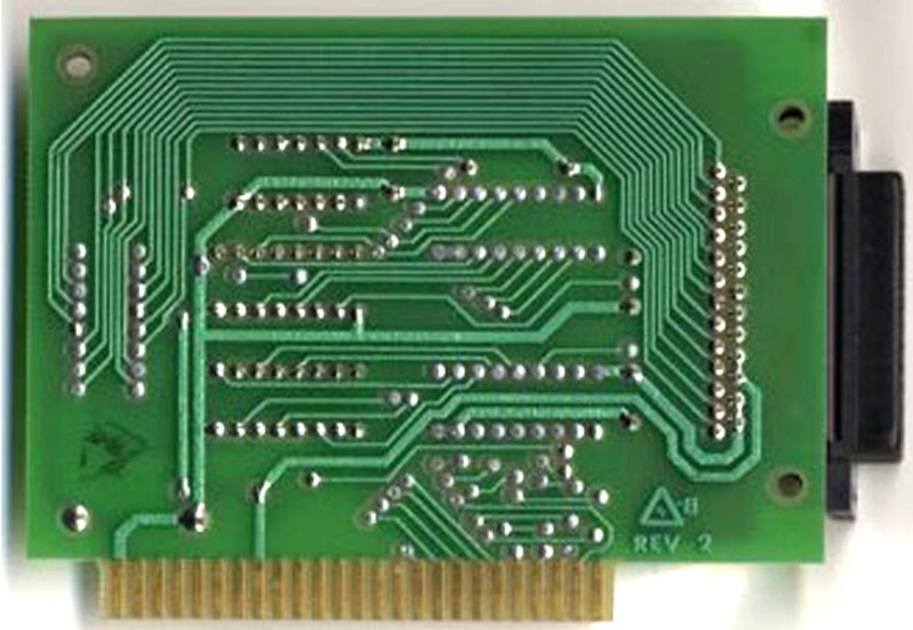

and here is a (unfortunatly bad) picture of a later version of the Interfacecard of the Alpha Syntauri (which is located inside of the Apple II) from componentseide:

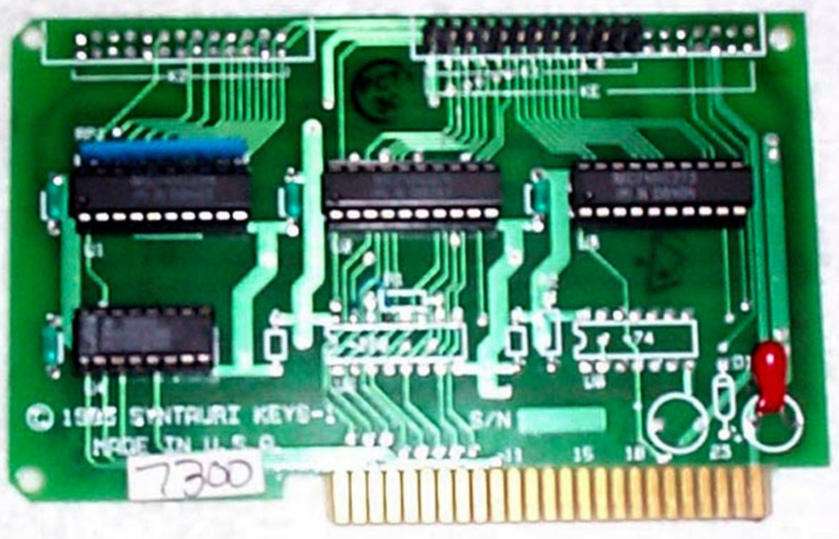
© 1985 SYNTAURI KEYS-1
MADE IN U.S.A.
S/N
7300

I am still searching for better pictures of this interface and more information on the card.
If a visitor of this page has such additional information please contact me at Applefritter.com.

After viewing the entire set of components lets get ahead to the next page with closer view to the Keyboard and the Footswitches as beeing the "external" Components of the Alpha Syntauri System and examining its details......

next page =>

....

....

◄ turn back to the indexpage ⟵

due to european laws and german court decision:
I hereby declare no responsibility to any "deep links" resulting from the links in this page. I have no influence to the pages linked hereby in this page and the
contents in those pages. I therefor can´t take any kind of responsibility to contents in the pages, where these links direct the readers browser to nor to the contents resulting from following up links from those pages. The reference to contents by this links is dependent ro the status of the date when the links have been set (April 2013) and it might occur that references and contents may change by the fact that domains may have been discontinued from their former owners.
In such cases i can´t take any kind of responsibility to the changed contents. this is specialy valid to banners, advertisements or merchandising links in the targeted
pages.

© copyright: Harro Walsh 2013

APPLEBOX

the alpha syntauri system
a ancient synthisizer concept for the Apple II

details about the keyboard and the footswitches

Lets startup with some pictures of the keyboard itself:

alphaSyntauri

after removing the top plate you will see this:

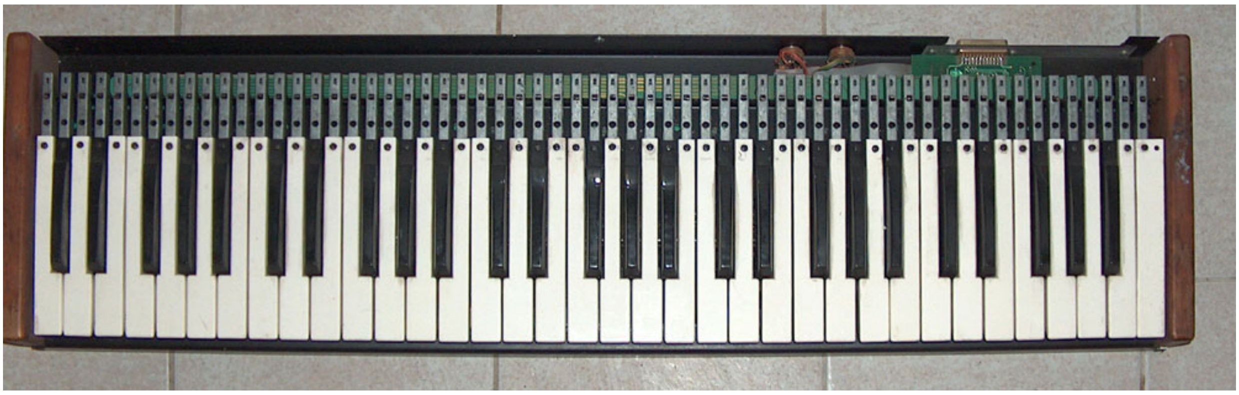

a closer view to the right upper side will offer this view:

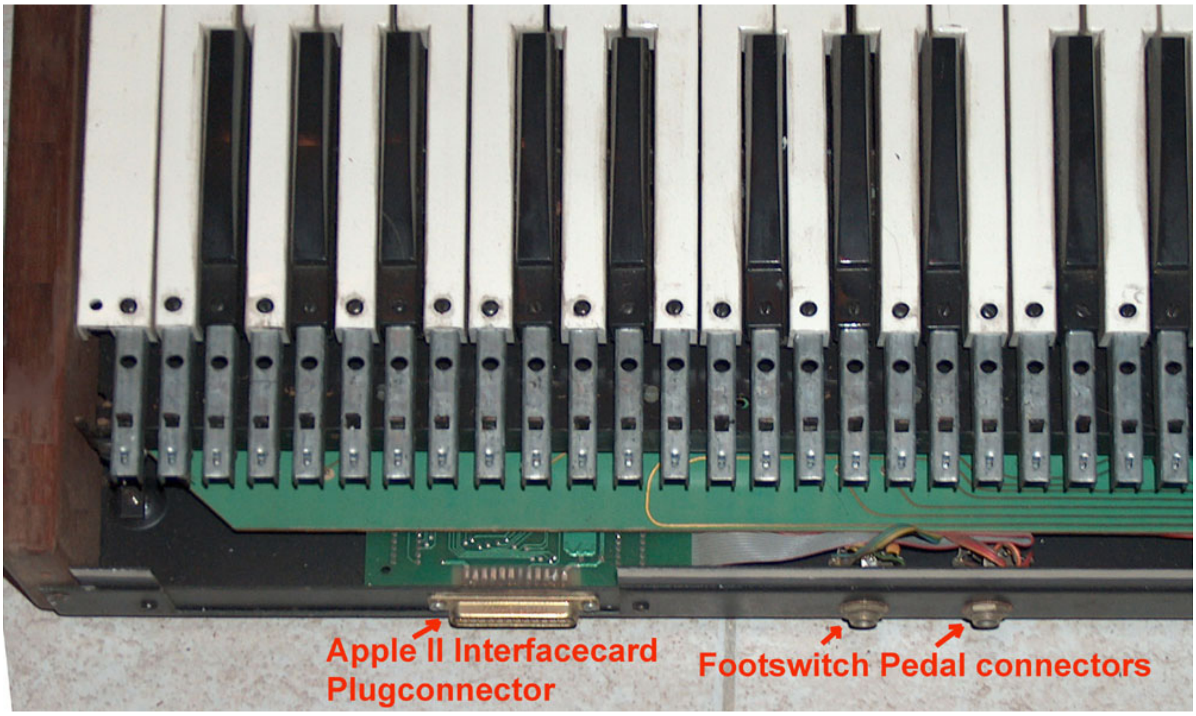
Apple II Interfacecard
Plugconnector
Footswitch Pedal connectors

Before taking a closer view to the other internal parts of the keyboard lets just take a closeup view to the Footswitch pedal connectors, while being extracted:

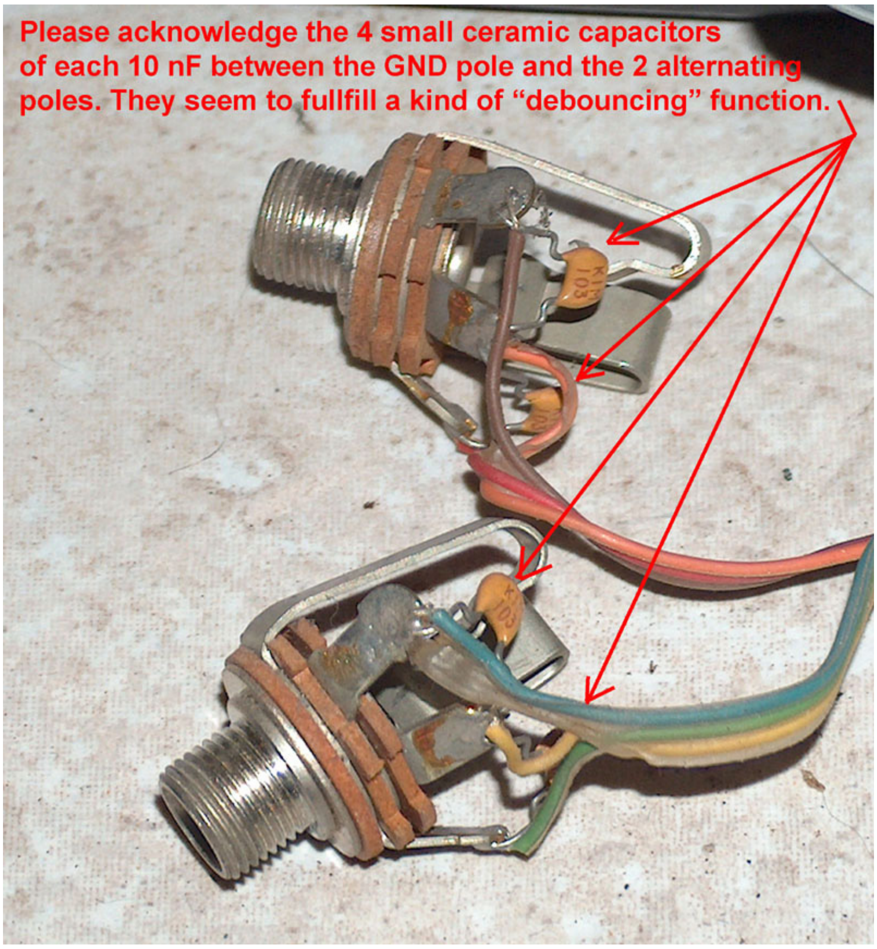
Please acknowledge the 4 small ceramic capacitors
of each 10 nF between the GND pole and the 2 alternating
poles. They seem to fullfill a kind of "debouncing" function.

Then after refitting the top plate and turning the keyboard around to the bottomside, lets take a view after the bottom plate has been removed:

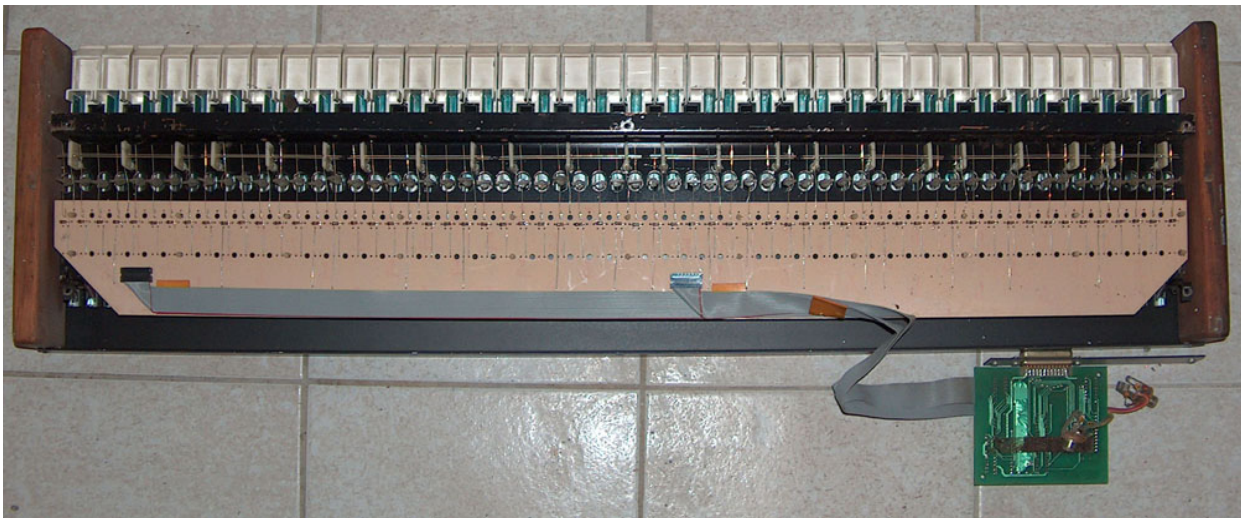

Next a closer view to the "giant PCB" that connects the keyswitches together - and we can drop the demand to examine the entire board - because it´s along it´s entire length eveywhare the same basic principal. there for here only one section in closeup view:

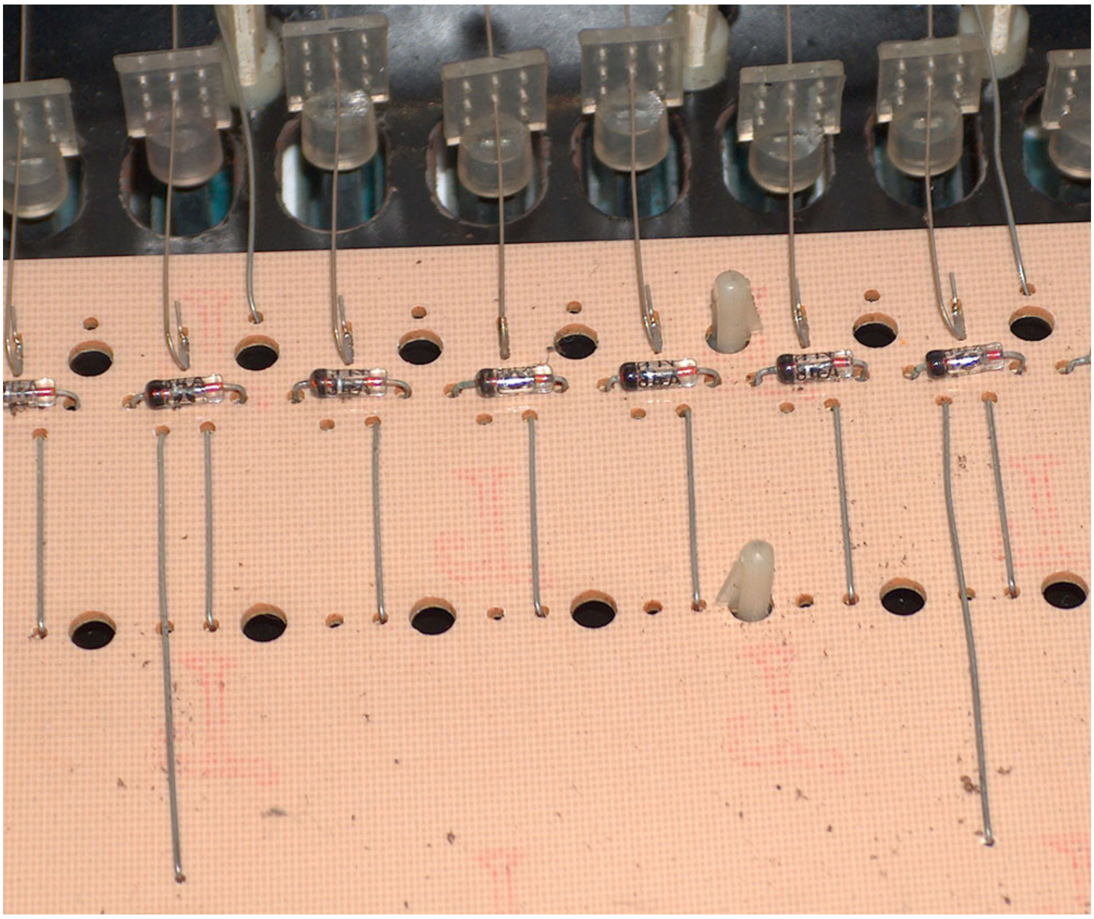

This pisture displays that each keyawitch is related to one rectifier diode.
The next picture displays a closeup to the keyswitch itself with a closeup view from the rear:

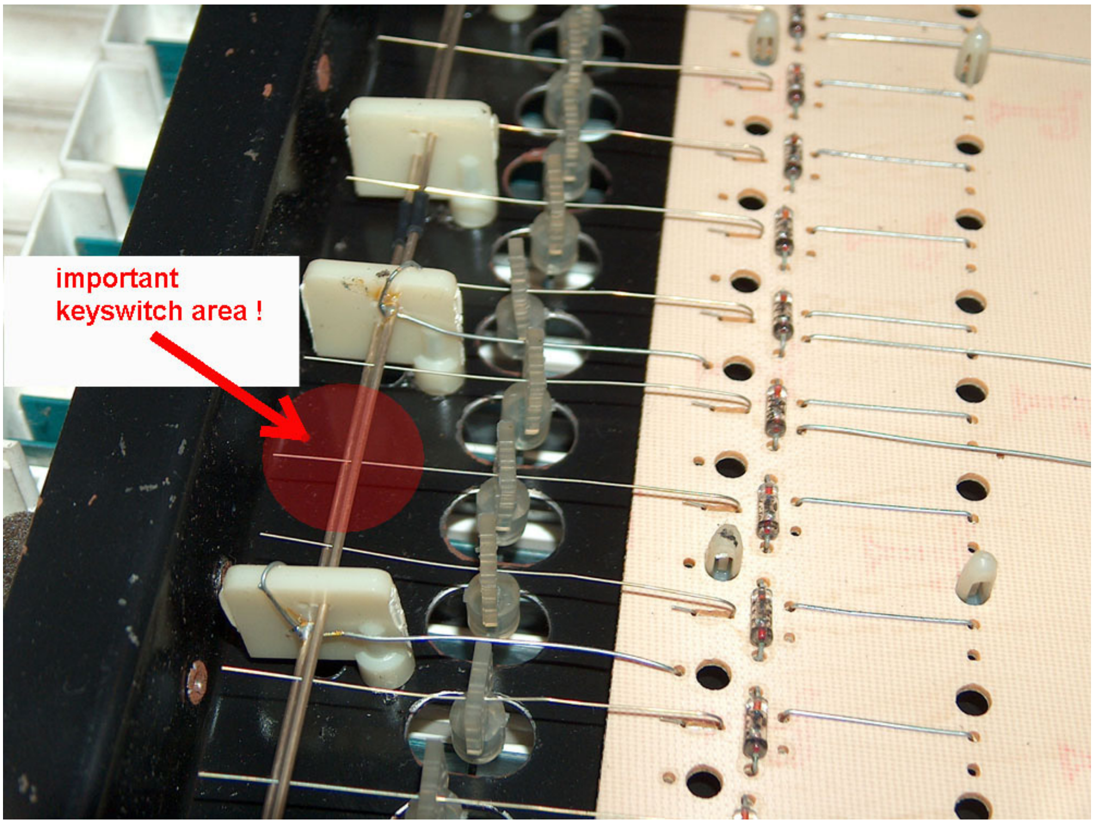

and to get a better view to the important part of the keyswitch now a closeup view in detail from the front:

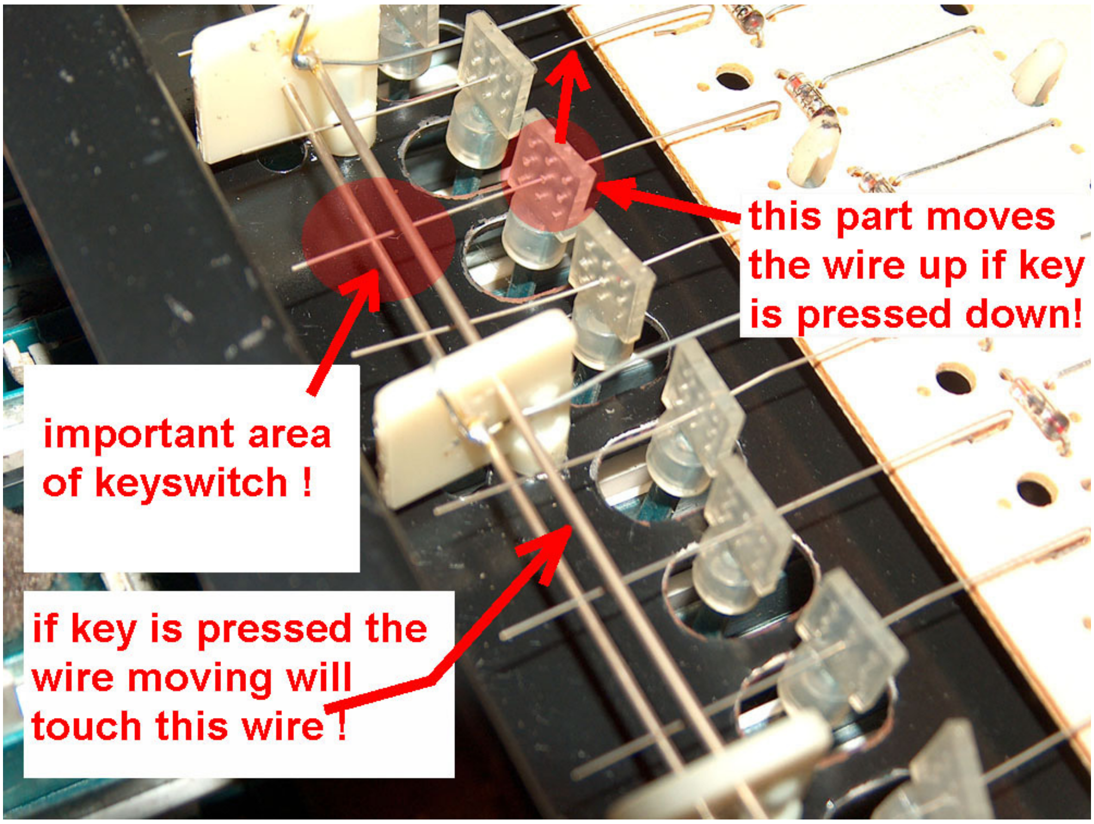
this part moves the wire up if key is pressed down!
important area of keyswitch !
if key is pressed the wire moving will touch this wire !

This picture shows in detail the manner the keyswitch is operating:
If the key is released the long steelwire from the PCB is right between the long steelwire bars above and below of the wire.
If the kay becomes pressed down the wire moves towards the upper steelbarwire and makes contact with that steelbar wire.
Be aware that this view is reverse view to normal postion. In normal postion the upper steelbar wire is the lower steelbar wire !

The mechanical creation of the keys (better keyswitches) in the alpha syntauri is quite comparable to the description of the DIY procedure of the piano-keyboard of the FORMANT as explained in the magazine elektor. This is explained here in the publication of that device at page 2 of that scanned pages. Allthough the pages are still in German language the drawings are quite clear and selfexplaining.

In this part of the page w´e´ll examine the footswitch and take a view inside of the switch.
Let´s start first wit the general basic view to the outside view of the footswitch:

Top of the footswitch:

Bottom of the footswitch:

Sideview of the footswitch:

dismounting the footswitch offers to us the following view:

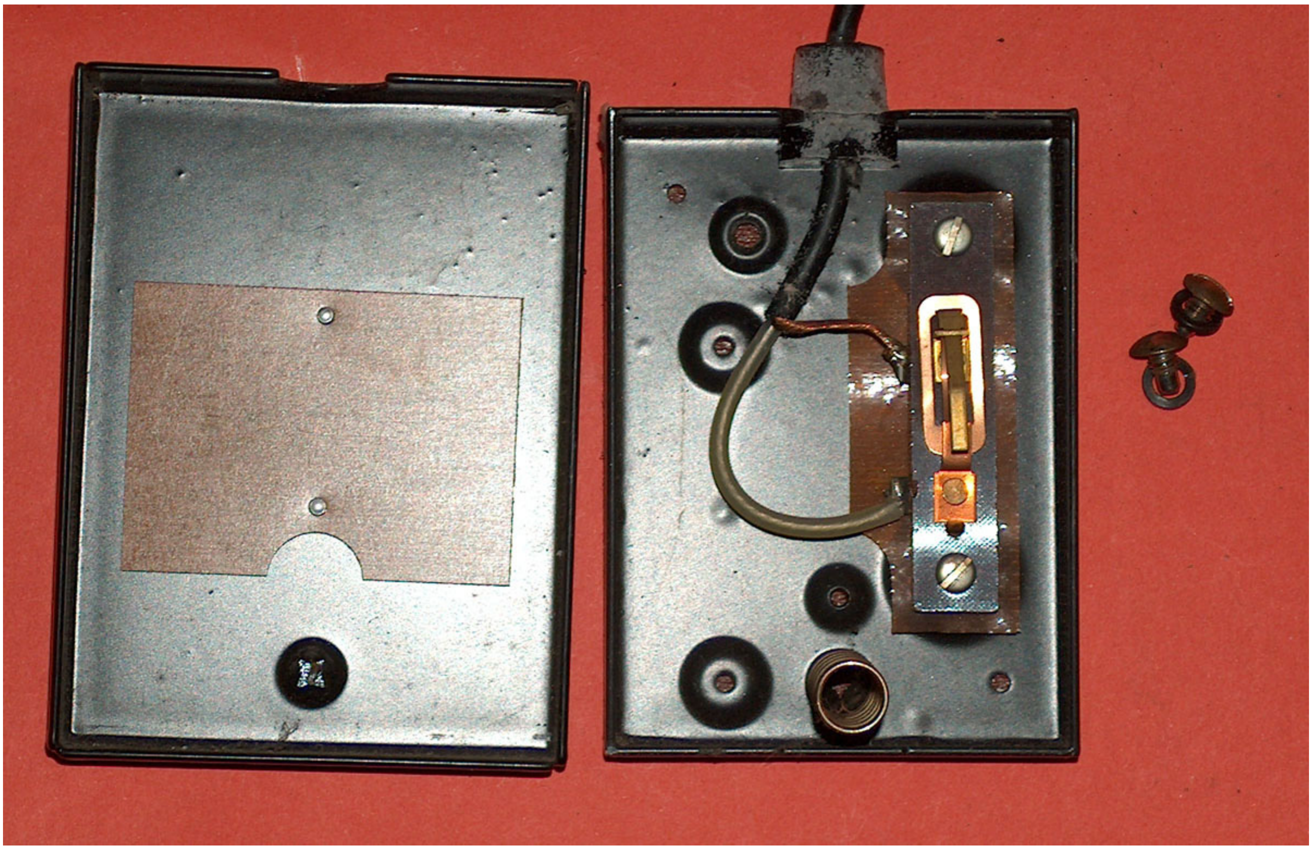

to get a better view about the switch take a look at this picture:

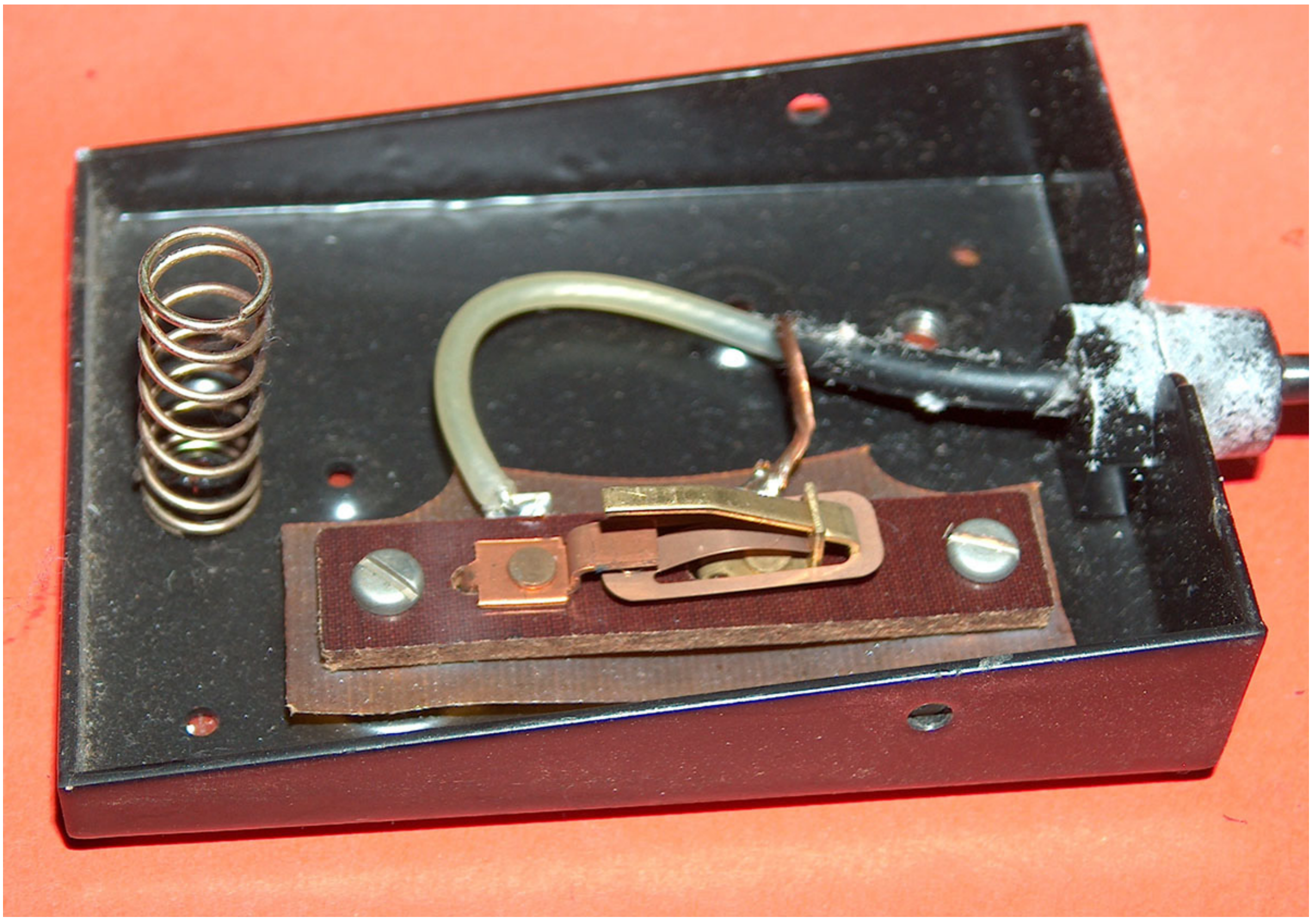

The steelspring at the left side keeps the pedal of the footswitch pressed upwards to keep the switch released.
And here is another closeup picture of the switching part:

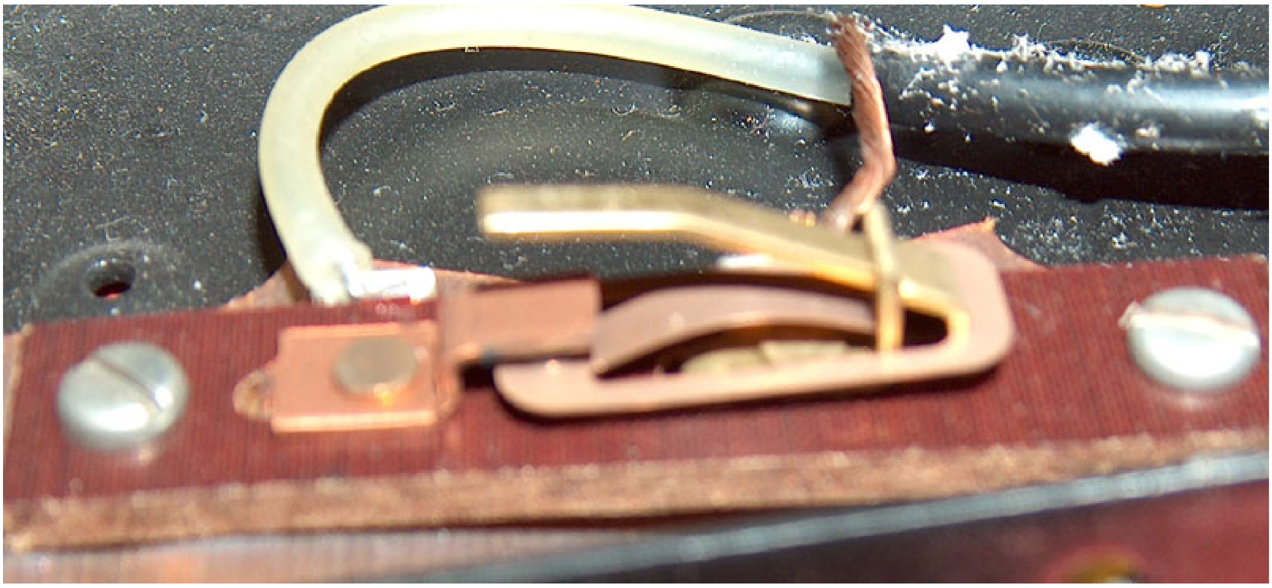

Next step we´ll take a closer view to the electronic PCB inside of the keyboard that performs the decoding of the keys pressed and the decoding of the footswitch.

Here is the view to the soldering side of the decoderPCB:

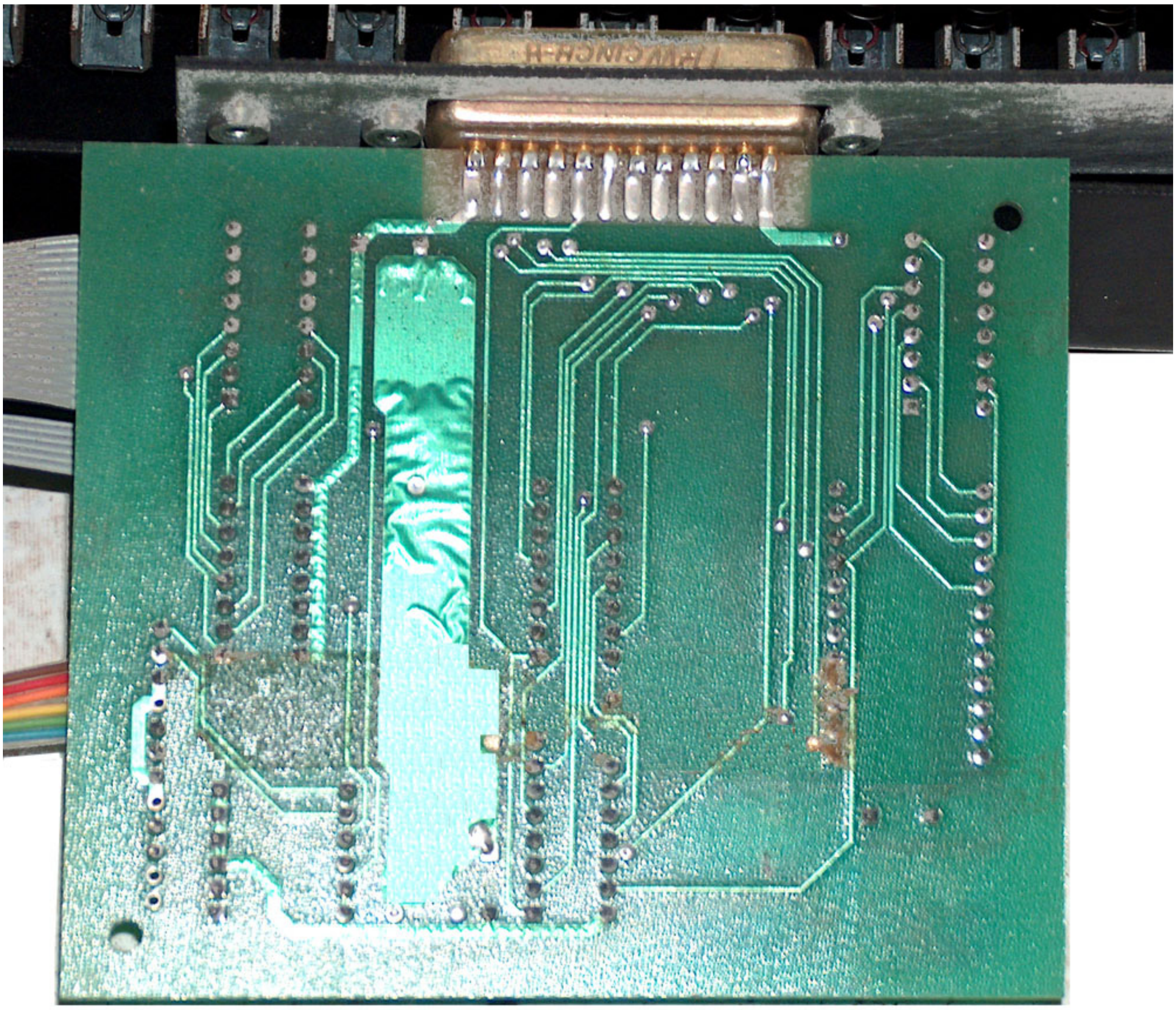

and here is the view to the component side of the decoder PCB:

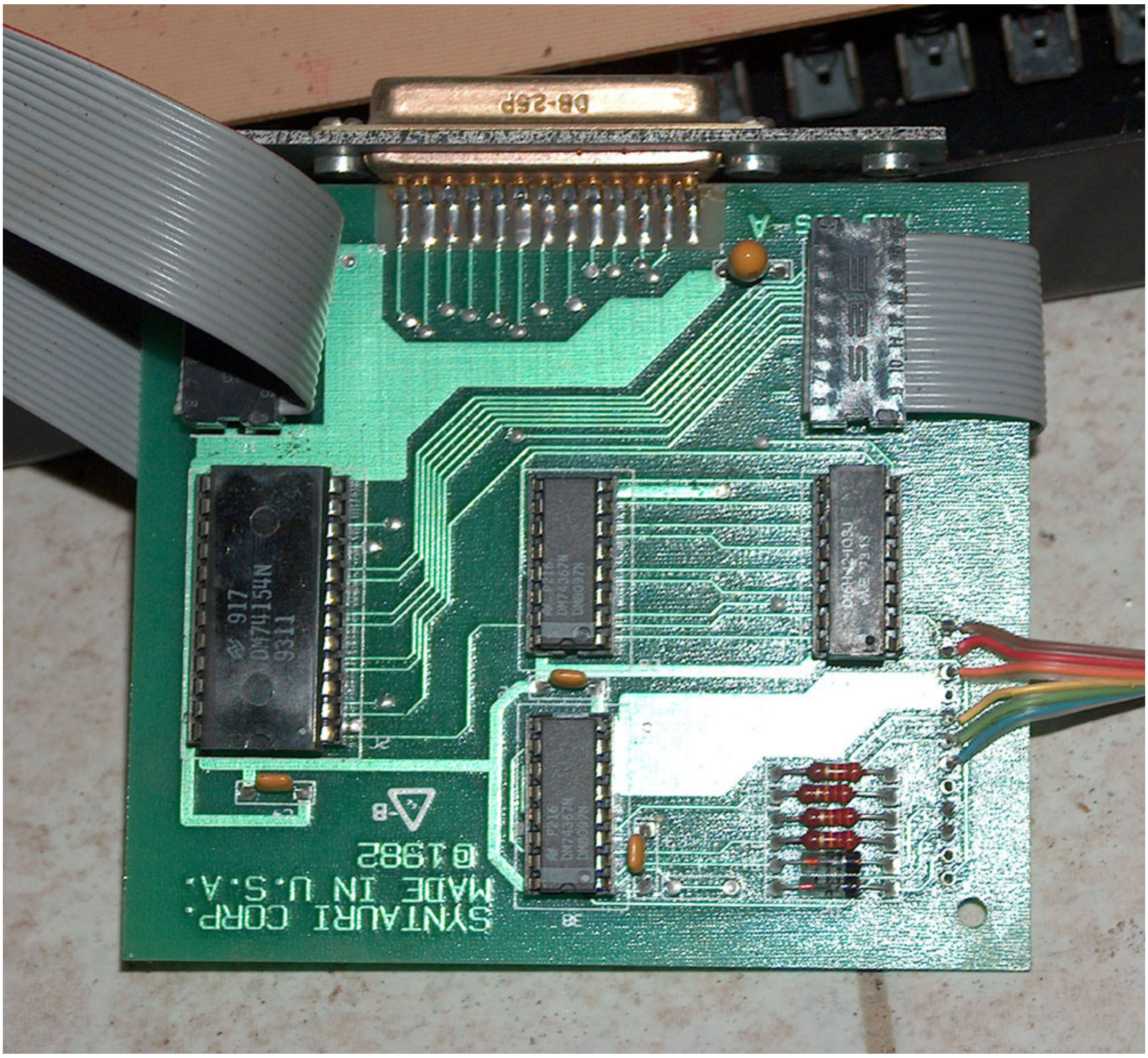
DB-25P
DM74154N
9311
DM74367N
SYNTAURI CORP.
MADE IN U.S.A.
©1982

and now added the circuitplan of this internal keyboard decoder card:

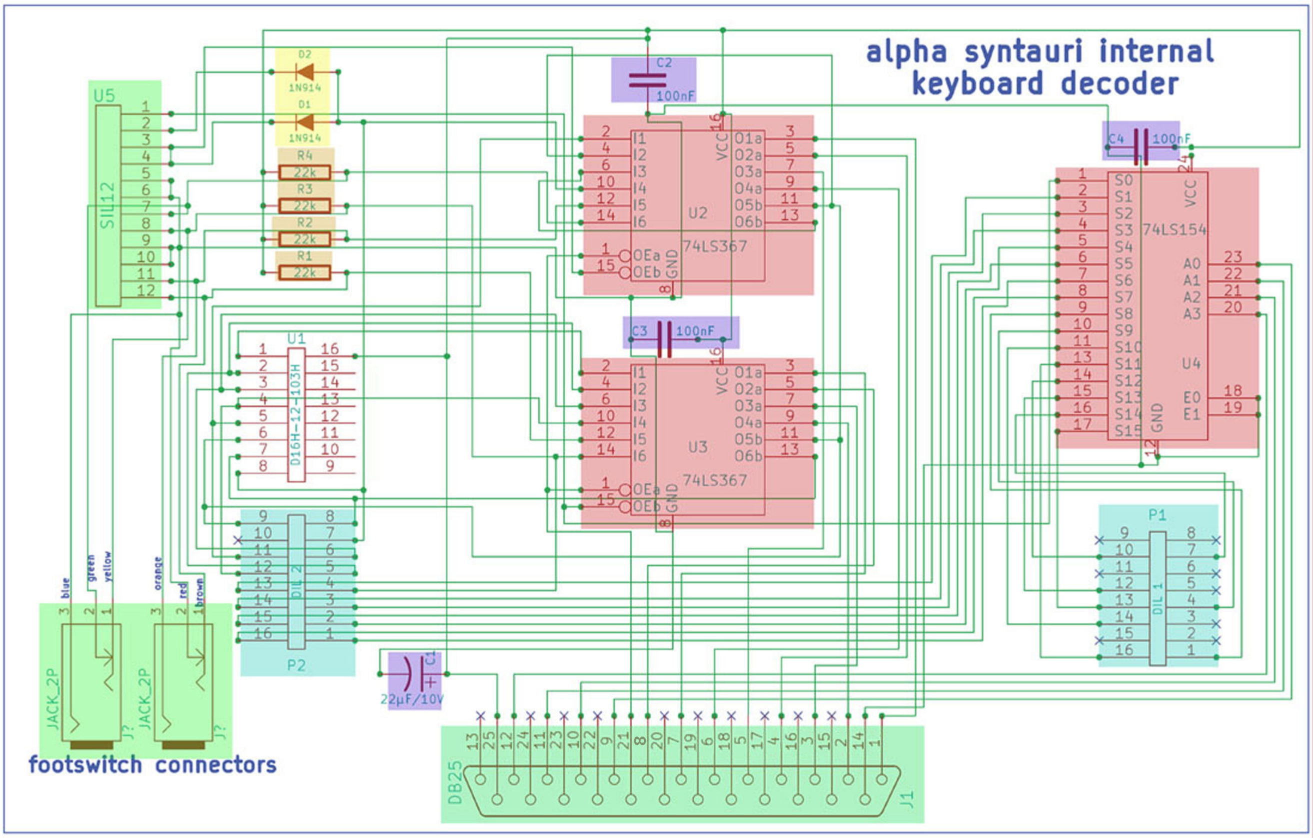
alpha syntauri internal
keyboard decoder
U5
SIL12
D2 1N914
D1 1N914
R4 22k
R3 22k
R2 22k
R1 22k
C2 100nF
U2 74LS367
U3 74LS367
C3 100nF
C4 100nF
U4 74LS154
U1 D16H-12-103H
P2 DIL 2
P1 DIL 1
C1 22µF/10V
DB25 J1
blue
green
yellow
orange
red
brown
JACK_2P J?
JACK_2P J?
footswitch connectors

soon more pictures and details as well as the related circuitplans will be added.

<= turn back to previous page	turn over to next page =>

....

◄ turn back to the indexpage ⟵

due to european laws and german court decision:
I hereby declare no responsibility to any "deep links" resulting from the links in this page. I have no influence to the pages linked hereby in this page and the contents in those pages. I therefor can´t take any kind of responsibility to contents in the pages, where these links direct the readers browser to nor to the contents resulting from following up links from those pages. The reference to contents by this links is dependent ro the status of the date when the links have been set (April 2013) and it might occur that references and contents may change by the fact that domains may have been discontinued from their former owners. In such cases i can´t take any kind of responsibility to the changed contents. this is specialy valid to banners, advertisements or merchandising links in the targeted pages.

© **copyright: Harro Walsh 2013**

APPLEBOX

the alpha syntauri system
a ancient synthisizer concept for the Apple II

the Apple II interface card of the alpha syntauri
now completed !

The interface of the alpha syntauri in the Apple II is rather simple due to the fact that it only passes over the information fron the internal decoder interface inside of the keyboard. Up to the moment it seems that one part of the information is a parallel set of the 8 Databits. And it seems that at the other hand some part of the information might be some kind of handshaking and probably some kind of Interrupt-handling. Unfortunatly this part of the information is not complete because the alpha syntauri system i have purchased from ebay did not have this interface card. The only information availiable at the moment yet, is taken from only 2 pictures that i have at the moment. Unfortunatly i cant view the PCB below the chips on the component side and therefor the paths of the traces can only be up to the moment a guess without verification.

Anyhow - lets proceed with the information availiable - at least at the moment - to the point, that might be claimed to be sure by trying to guess the parts that "should be that way" by assuming normal conditions....

Here is the picture of the top of the interface:

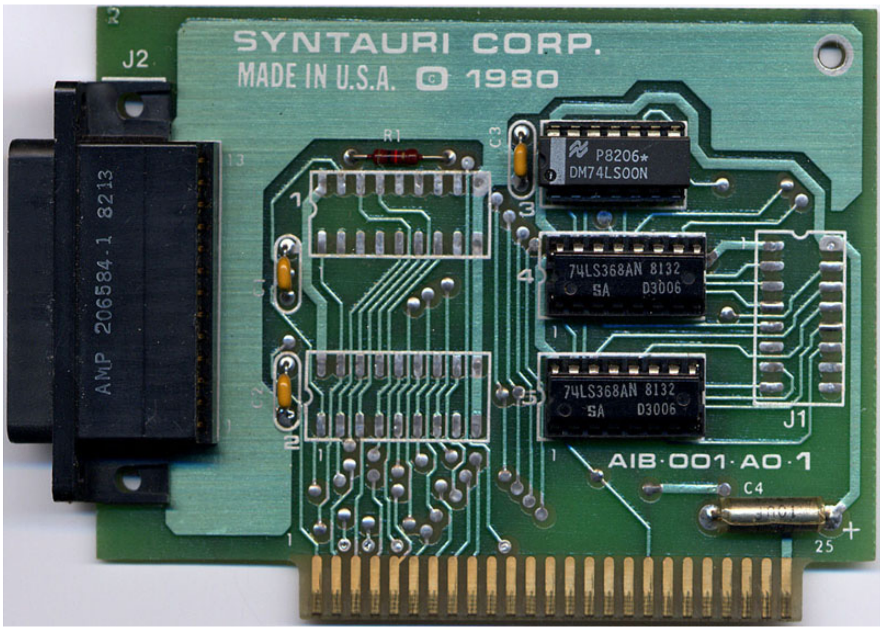

and now the picture of the solderingside of that interface card:

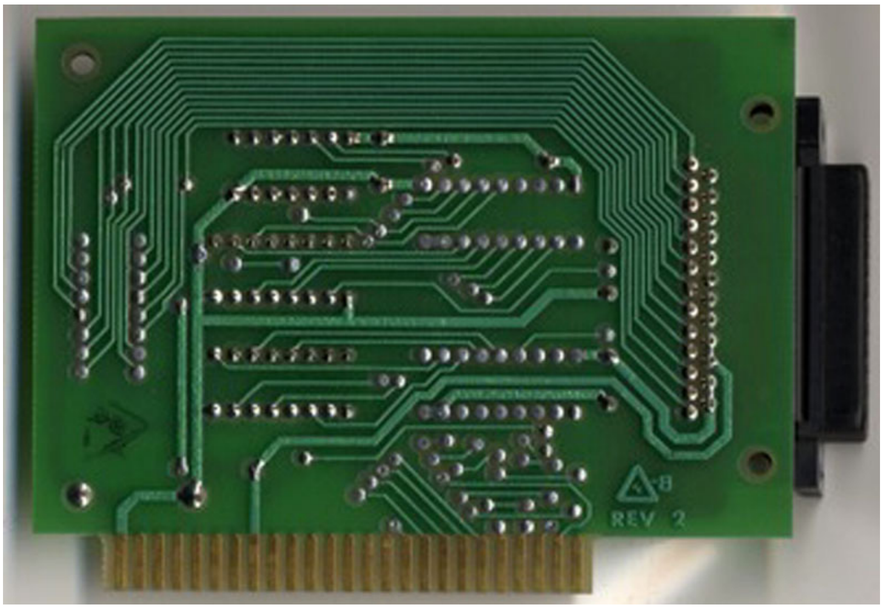

so at the moment the following picture shows the part of the card that can´t be determined at the moment:

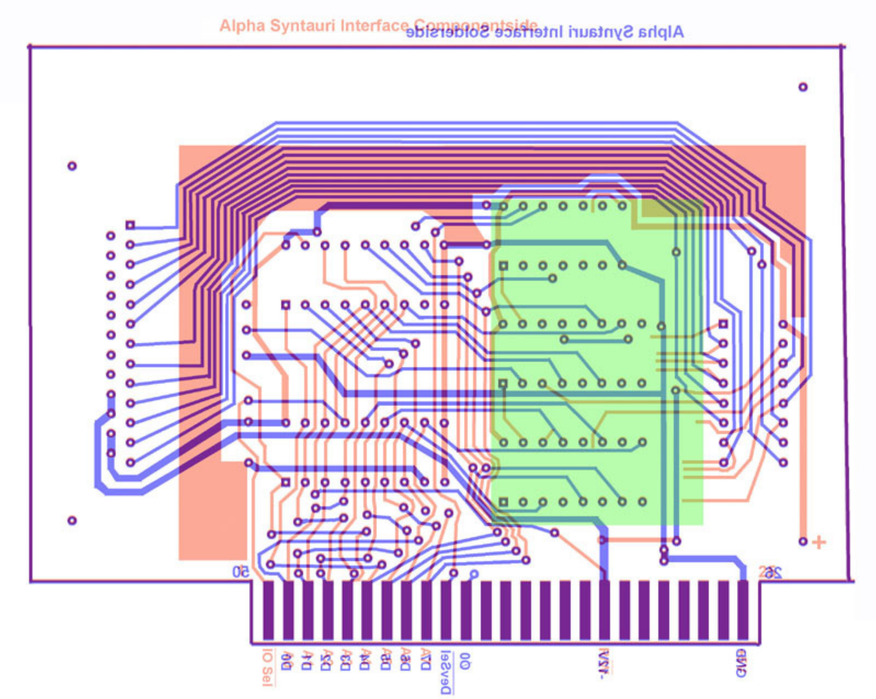
Alpha Syntauri Interface Componentside
Alpha Syntauri Interface Solderside
50
26
+
IO Sel
D0
D1
D2
D3
D4
D5
D6
D7
DevSel
00
-12V
GND

The following picture displays the traces fron the soldering side which are safe identified:

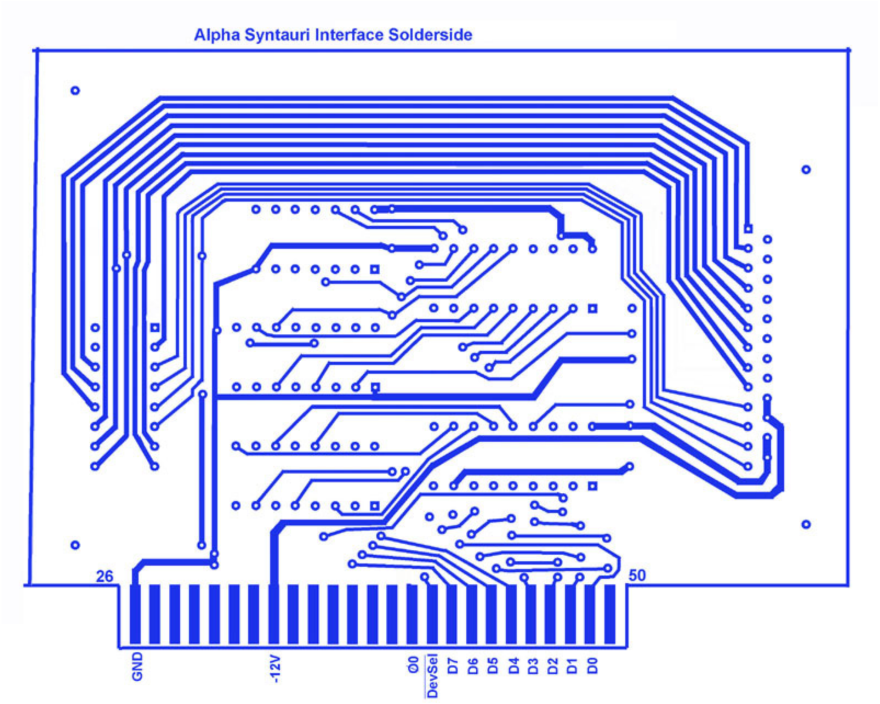
Alpha Syntauri Interface Solderside
26
50
GND
-12V
Ø0
DevSel
D7
D6
D5
D4
D3
D2
D1
D0

and here the part of the component side of the interface card that is also detected for sure as red layer:

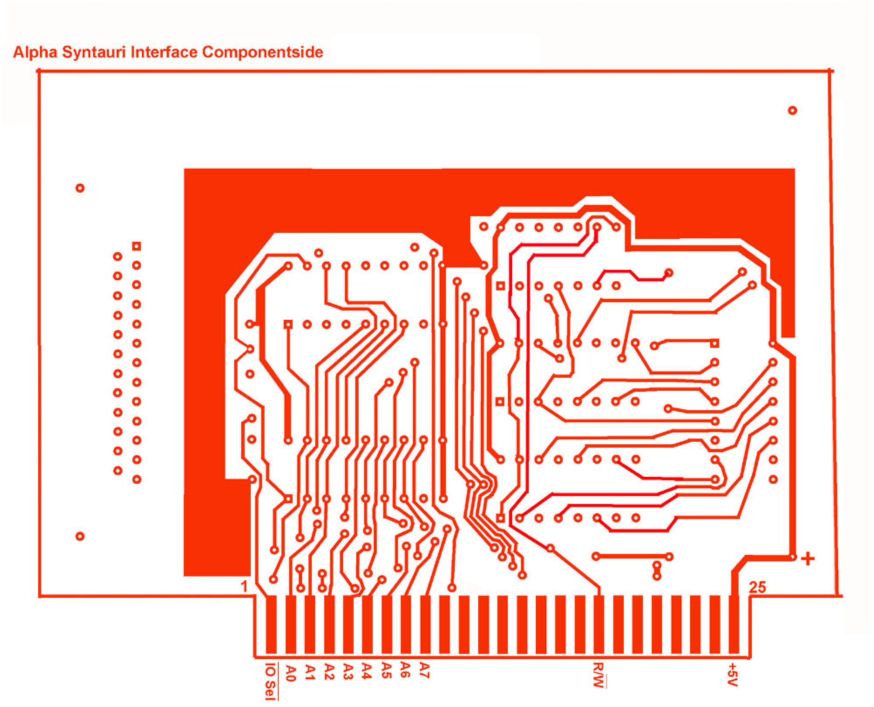
Alpha Syntauri Interface Componentside
1
25
+
IO Sel
A0
A1
A2
A3
A4
A5
A6
A7
R/W
+5V

and here is a picture of the current circuitplan with the information availiable up to this moment...:

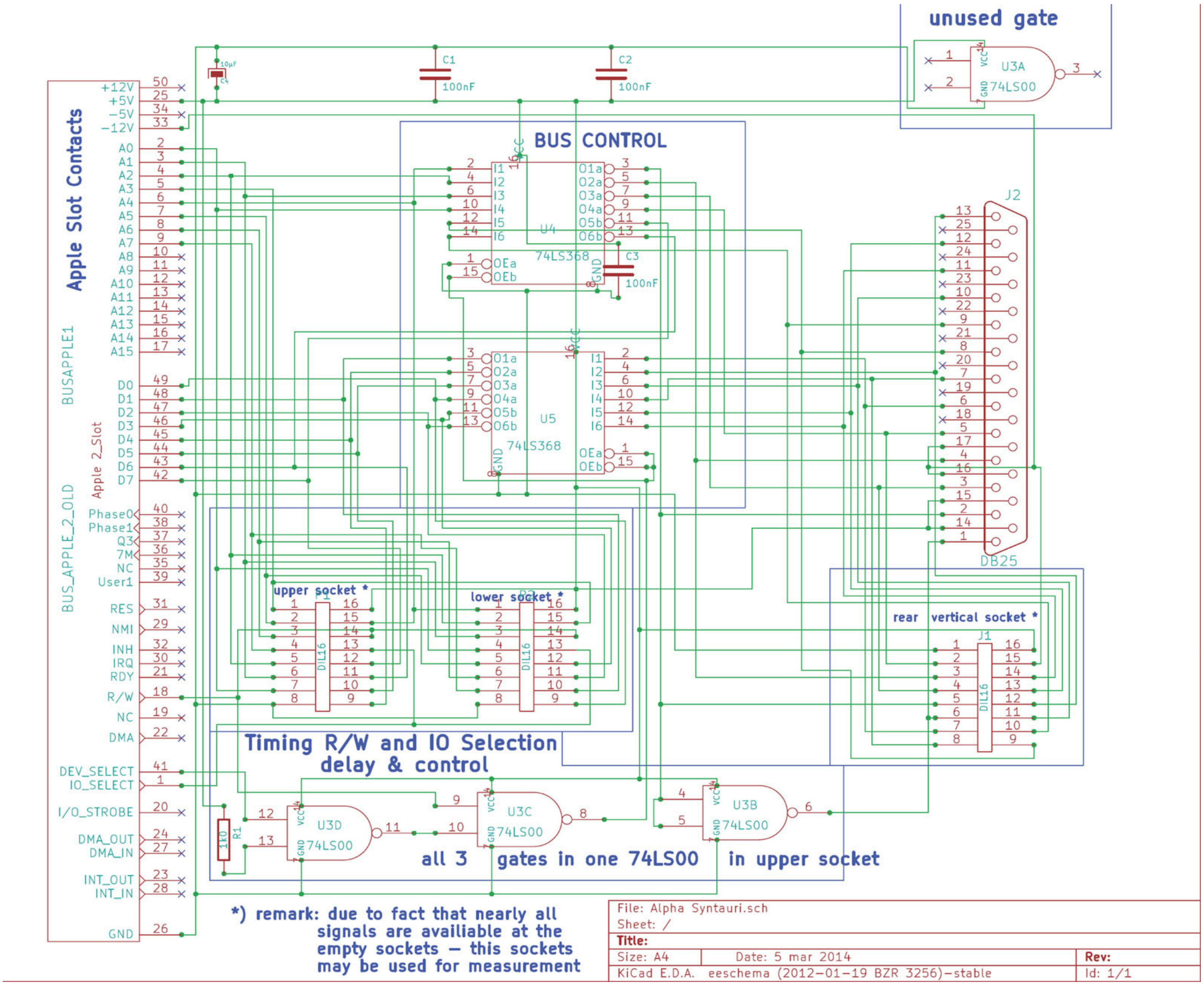
unused gate
U3A
74LS00
BUS CONTROL
U4
74LS368
U5
74LS368
C1
100nF
C2
100nF
C3
100nF
Apple Slot Contacts
BUSAPPLE1
Apple 2_Slot
BUS_APPLE_2_OLD
+12V
+5V
−5V
−12V
A0
A1
A2
A3
A4
A5
A6
A7
A8
A9
A10
A11
A12
A13
A14
A15
D0
D1
D2
D3
D4
D5
D6
D7
Phase0
Phase1
Q3
7M
NC
User1
RES
NMI
INH
IRQ
RDY
R/W
NC
DMA
DEV_SELECT
IO_SELECT
I/O_STROBE
DMA_OUT
DMA_IN
INT_OUT
INT_IN
GND
J2
DB25
upper socket *
lower socket *
rear vertical socket *
J1
DIL16
Timing R/W and IO Selection
delay & control
U3D
U3C
U3B
74LS00
R1
1k0
all 3 gates in one 74LS00 in upper socket
*) remark: due to fact that nearly all
signals are availiable at the
empty sockets – this sockets
may be used for measurement
File: Alpha Syntauri.sch
Sheet: /
Title:
Size: A4
Date: 5 mar 2014
Rev:
KiCad E.D.A. eeschema (2012-01-19 BZR 3256)-stable
Id: 1/1

and here is the pinout of the cable from this Apple II interfacecard to the alpha syntauri keyboard:

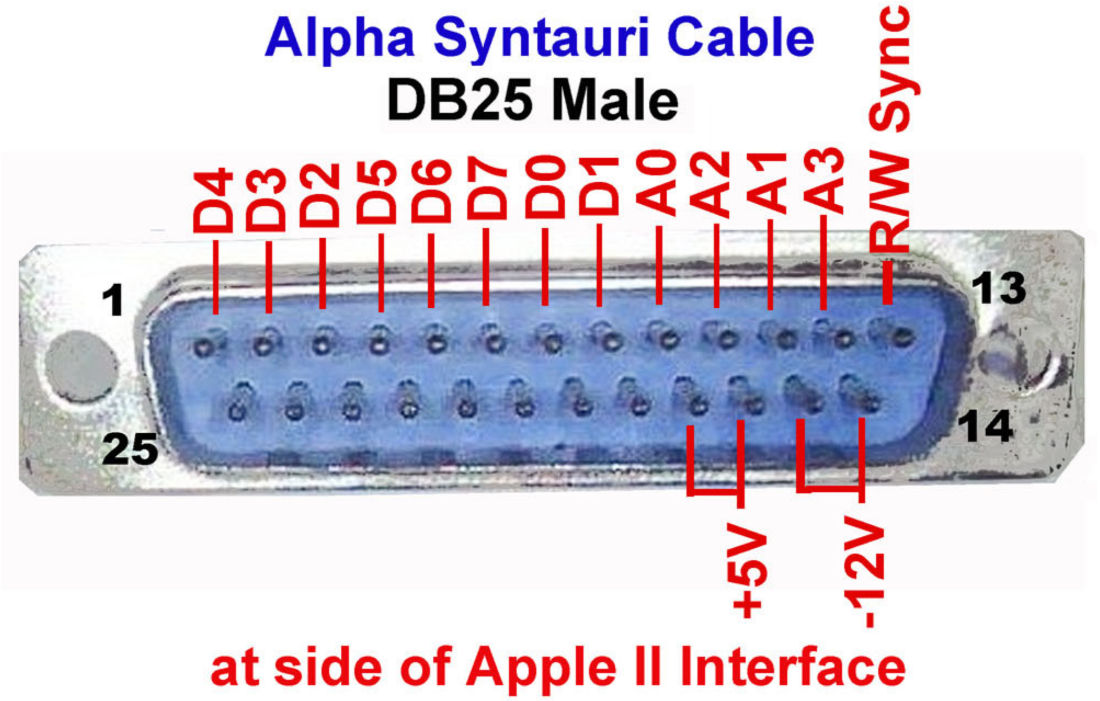
Alpha Syntauri Cable
DB25 Male
D4
D3
D2
D5
D6
D7
D0
D1
A0
A2
A1
A3
R/W Sync
1
13
25
14
+5V
-12V
at side of Apple II Interface

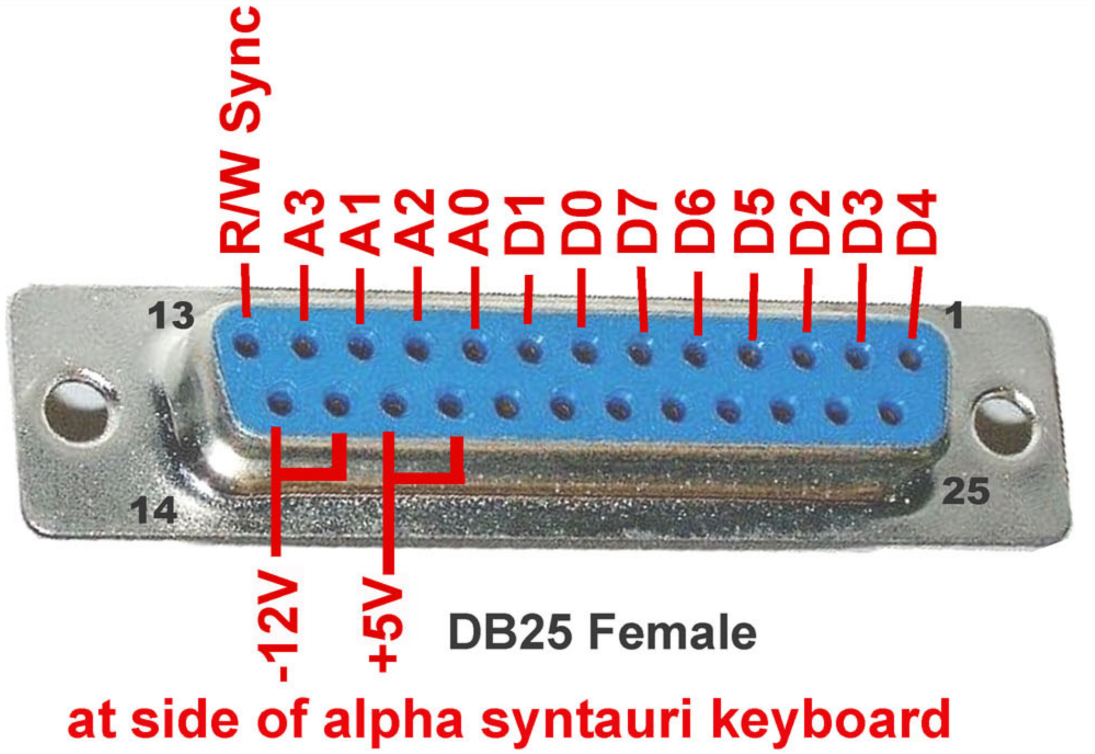
R/W Sync
A3
A1
A2
A0
D1
D0
D7
D6
D5
D2
D3
D4
13
1
14
25
-12V
+5V
DB25 Female
at side of alpha syntauri keyboard

there is also another kind of interface that was distributed along with the alpha syntauri system, but the picture of that card is unfortunatly that bad, that there is not the slightest chance to reverse engineer it by that picture (even more because also a picture of the rearside / soldering side of that card is missing/ not availiable):

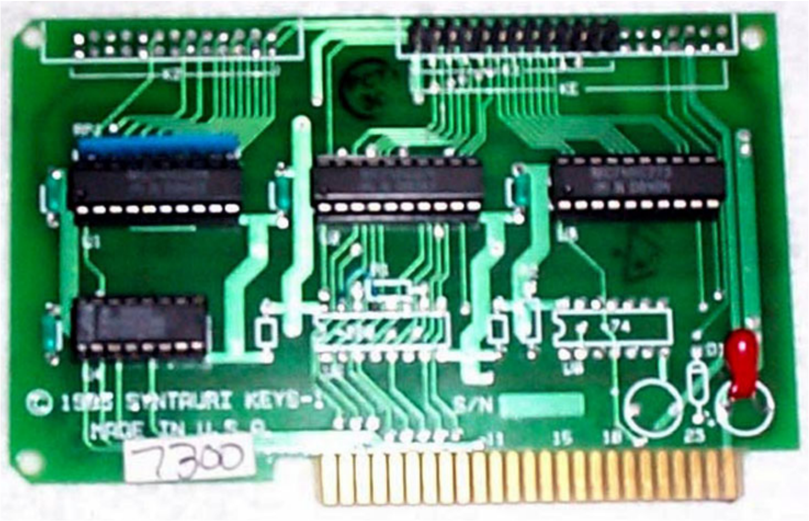

<= back to previous page | go to next page =>

....

◄ turn back to the indexpage ⟵

due to european laws and german court decision:
I hereby declare no responsibility to any "deep links" resulting from the links in this page. I have no influence to the pages linked hereby in this page and the contents in those pages. I therefor can´t take any kind of responsibility to contents in the pages, where these links direct the readers browser to nor to the contents resulting from following up links from those pages. The reference to contents by this links is dependent ro the status of the date when the links have been set (April 2013) and it might occur that references and contents may change by the fact that domains may have been discontinued from their former owners. In such cases i can´t take any kind of responsibility to the changed contents. this is specialy valid to banners, advertisements or merchandising links in the targeted pages.

© **copyright: Harro Walsh 2013**

APPLEBOX

the alpha syntauri system
a ancient synthisizer concept for the Apple II

at this page we will examine the front card of the Mountain Computer Music System

The purpose of the Mountain Computer Music System in relation / interaction with the alpha syntauri is the generation of the soundwaves. It´s the system to perform the translation from pressed keys at the keyboard to output of sound to an external Amplifioer and from there to the speakers. And besides of the software of the alpha syntauri, that in fact just stores the keypresses at the keyboard and the setup of sounds at the Mountain Computer Music System.

The Mountain Computer Music System itself consists of two cards: the front card which might be called the system interface that performes interaction between the computer and the software while the alternating card introduces in the later page might be called the "Generation card", that performs the real sound output and that also handles the communication with the lightpen and it´s interaction with the software.

Allthough in this picture both cards are connected with a hard linking connector system - some older systems (like the one i have) are linked together with a flexible system. That flexible system is very vulnerable. Therefor i decided to not only detect the traces below the IC-sockets, but instead to desolder / strip off the entire card and when performing the repopulation to replace the connectior between this cards with goldplated long pin pluging system.

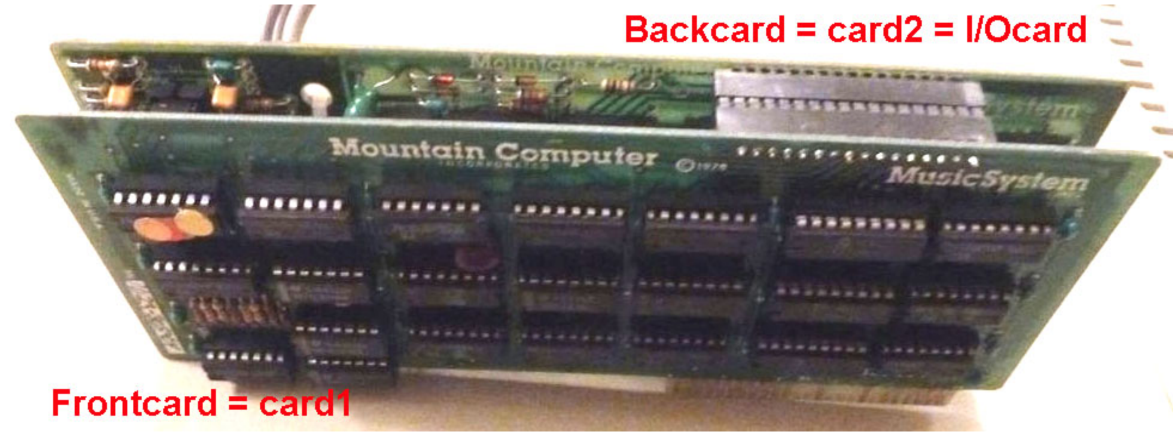

Here is the view to the rear soldering side of the front card (here with a "hard connector linking system):

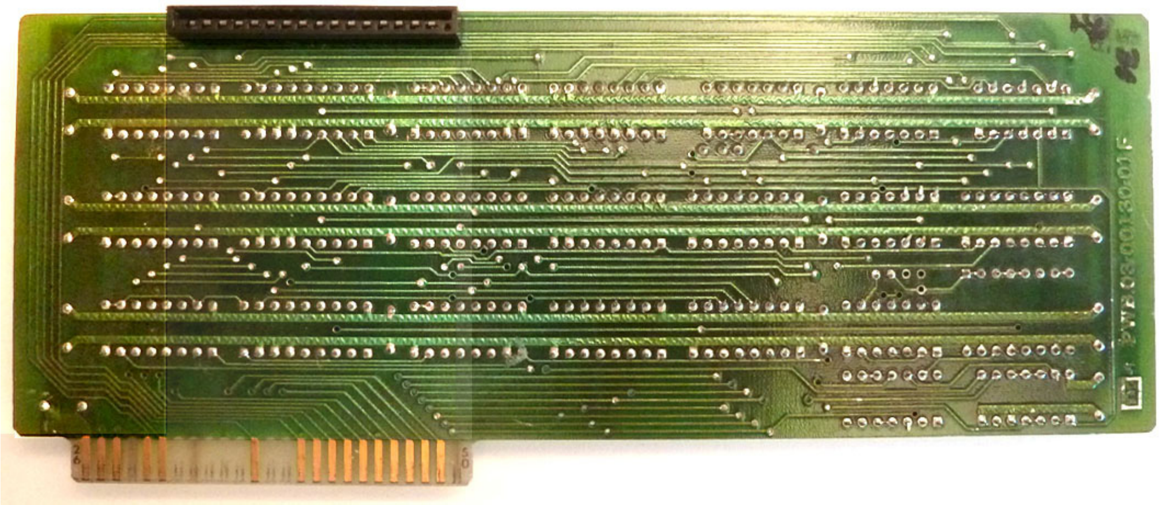

Here is the view to the populated side of this front card:

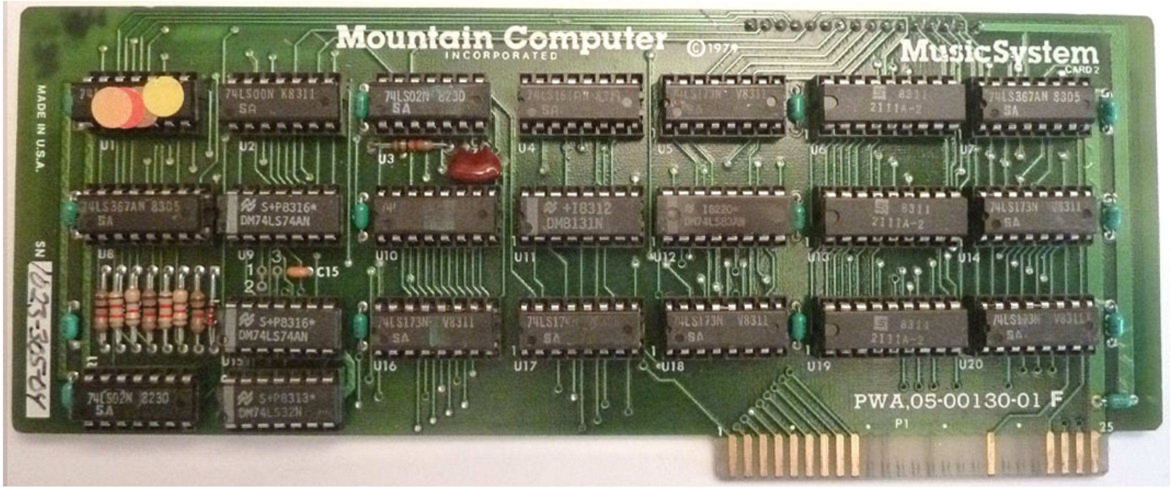
Mountain Computer
INCORPORATED
©1979
MusicSystem
CARD 2
MADE IN U.S.A.
SN
PWA,05-00130-01 F
P1
25

Here is the view to the (nearly entirely) desoldered card displaying the traces below of the sockets:

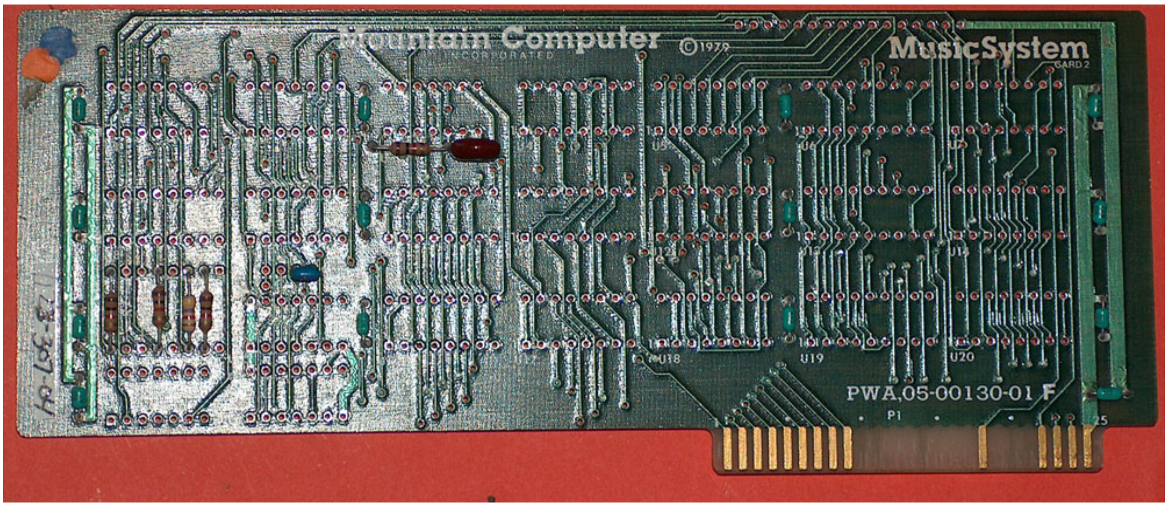
Mountain Computer
INCORPORATED
©1979
MusicSystem
CARD 2
U18
U19
U20
PWA,05-00130-01 F
P1
25

After reproducing a drawing and transfer of the traces to that drawíngs (blue side represents soldering side and red side represents componentsisde) the resulting combination of both layers (solderingside and component side) to this map with both layers:

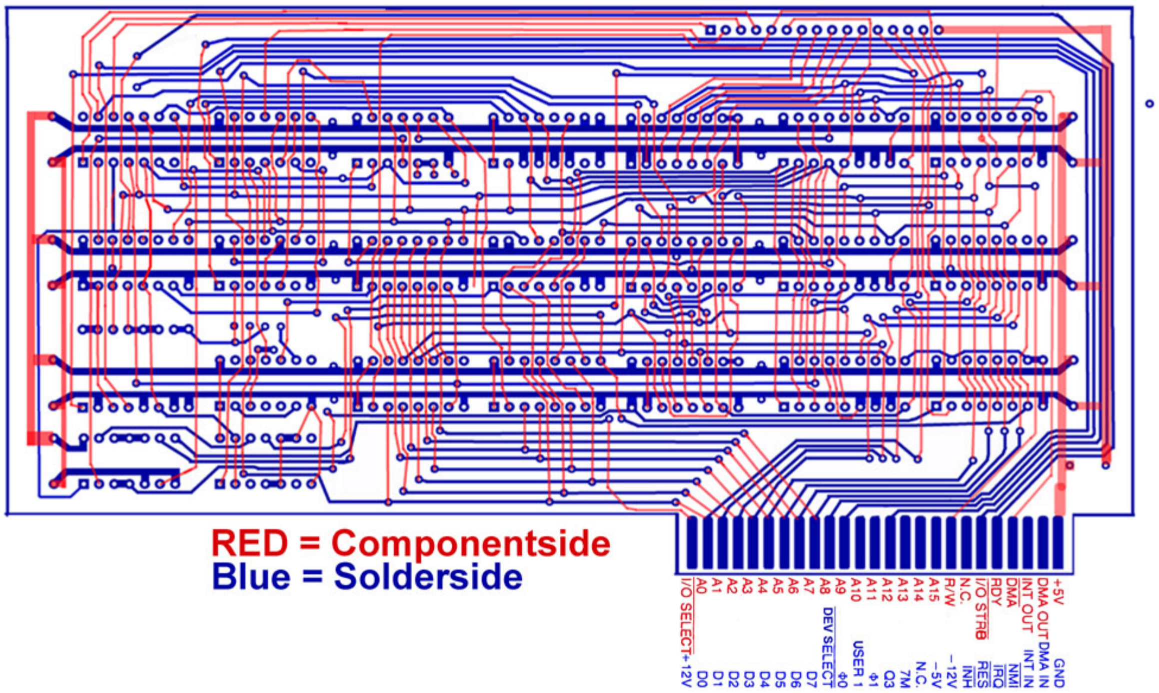
RED = Componentside
Blue = Solderside
I/O SELECT
A0
A1
A2
A3
A4
A5
A6
A7
A8
A9
A10
A11
A12
A13
A14
A15
R/W
N.C.
I/O STRB
RDY
DMA
INT OUT
DMA OUT
+5V
+12V
D0
D1
D2
D3
D4
D5
D6
D7
DEV SELECT
Φ0
USER 1
Φ1
Q3
7M
N.C.
−5V
−12V
INH
RES
IRQ
NMI
INT IN
DMA IN
GND

and here in the drawing that displays the used components and the used values (red = circuits, blue = capacitors, light brown = resistors, yellow = diode):

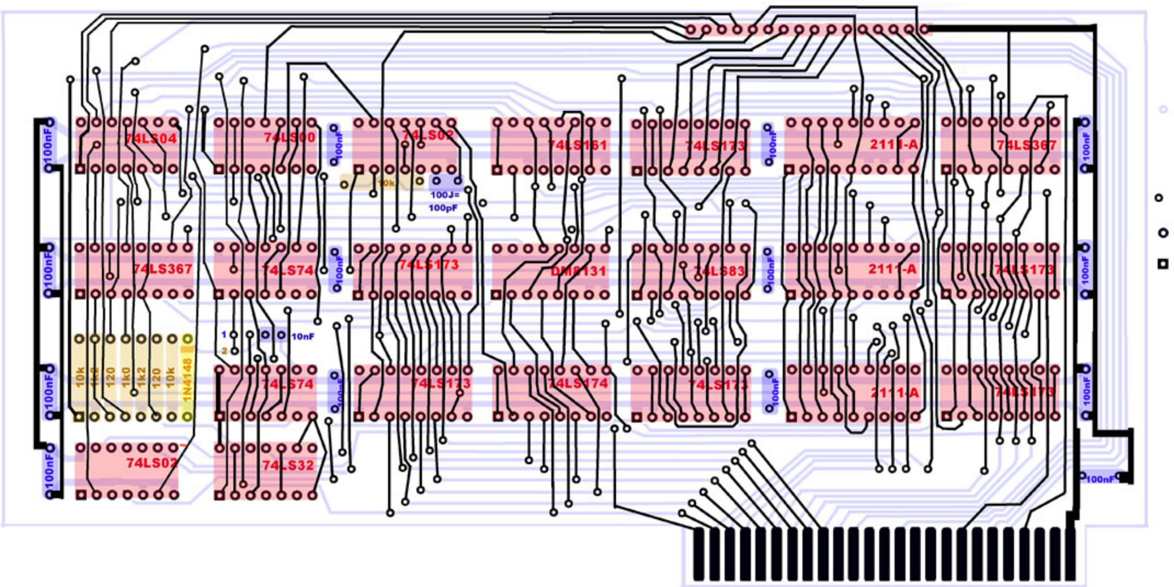
74LS04
74LS00
74LS02
74LS161
74LS173
2111-A
74LS367
74LS367
74LS74
74LS173
DM8131
74LS83
2111-A
74LS173
74LS74
74LS173
74LS174
74LS173
2111-A
74LS173
74LS02
74LS32
100nF
10nF
100J=
100pF
10k
1k0
1k2
120
1N4148

So now after 3 days of work this part of the task is completed and the circuitplan is completed:

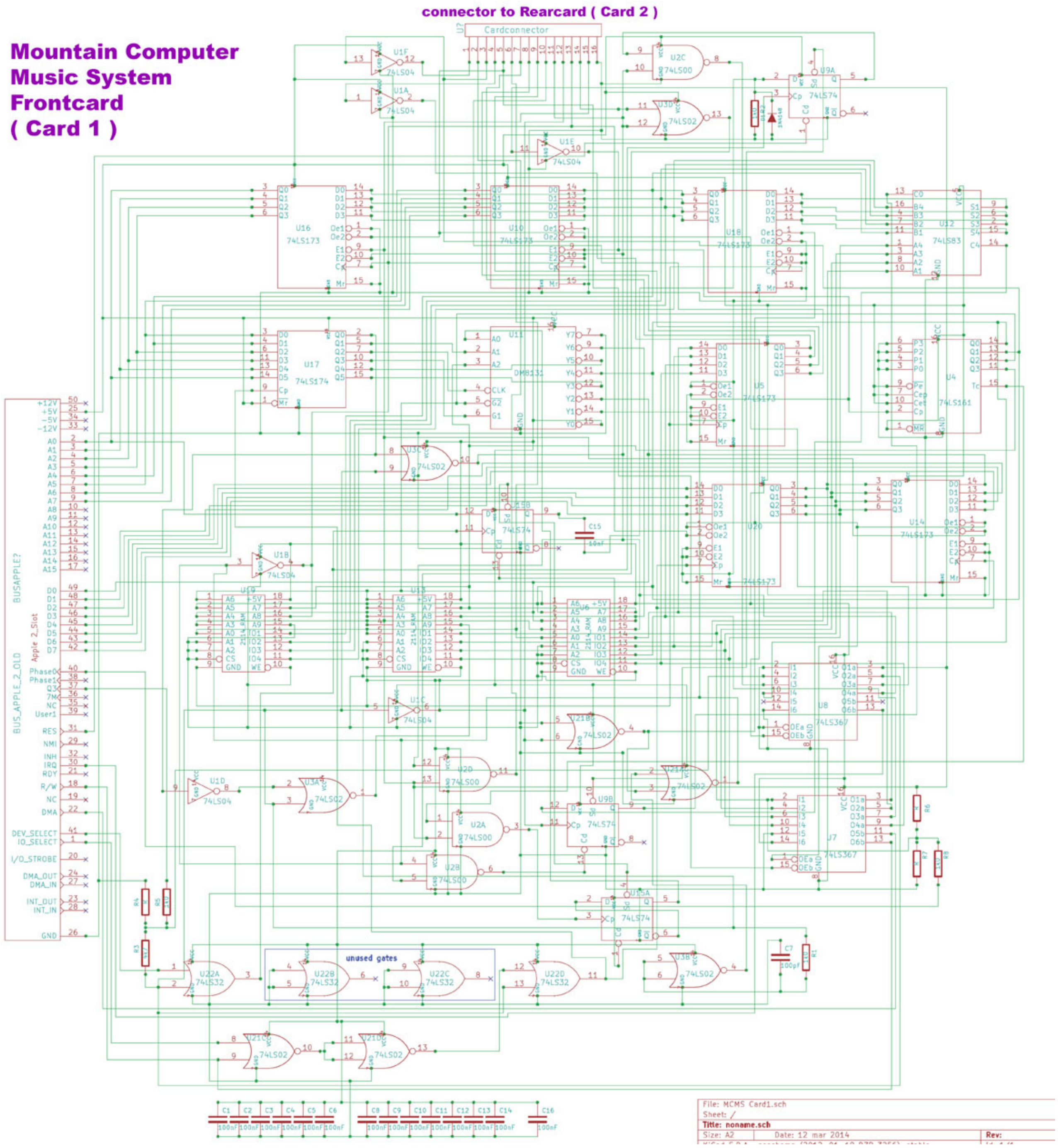
connector to Rearcard (Card 2)
Mountain Computer
Music System
Frontcard
(Card 1)
Cardconnector
unused gates
File: MCMS Card1.sch
Sheet: /
Title: noname.sch
Size: A2
Date: 12 mar 2014
Rev:

<= back to previous page	go ahead to next page =>

....

◄ turn back to the indexpage ⟵

due to european laws and german court decision:
I hereby declare no responsibility to any "deep links" resulting from the links in this page. I have no influence to the pages linked hereby in this page and the contents in those pages. I therefor can´t take any kind of responsibility to contents in the pages, where these links direct the readers browser to nor to the contents resulting from following up links from those pages. The reference to contents by this links is dependent ro the status of the date when the links have been set (April 2013) and it might occur that references and contents may change by the fact that domains may have been discontinued from their former owners. In such cases i can´t take any kind of responsibility to the changed contents. this is specialy valid to banners, advertisements or merchandising links in the targeted pages.

© **copyright: Harro Walsh 2013**

APPLEBOX

the alpha syntauri system
a ancient synthisizer concept for the Apple II
at this page we will examine the back card of the
Mountain Computer Music System, I/O card

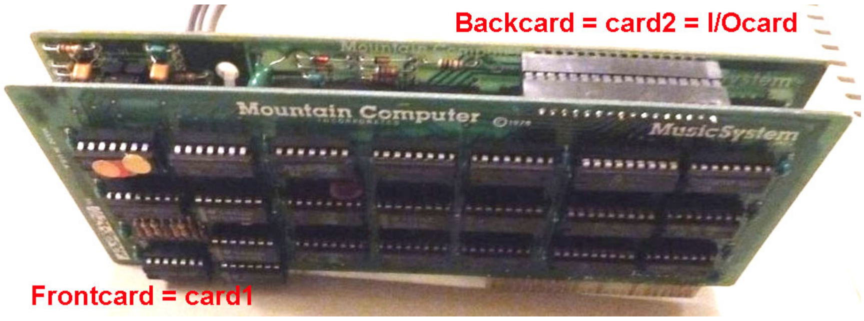

In this part i´ll show the details about the second rear card of the system.The cables to the external devices are connected to this card. The most simple part of the external devices is the lightpen. In fact it´s just a simple phototransistor that detects light and then it switches the power just like any normal switching transistor. The only difference is that instead of a voltage to the baseconnector in this transiostor has a lens at the base and the light causes the transistor to switch through. The Transistor is a MRD370. The pen is visible in the picture below of the card.

The other 2 cables are ending at chich connectors which are common within audio systems. Both cables together act as stereo output - one cable contains signals for right channel and the other contains the signals of the left channel. The output level is equal to standard audiosystems and equals to 0,7 Volt which is normalelly feeded to line inputs at the amplifier.So the part of the electronis on the card in position front (left side) of the holes where the cablebinders are located bear the analog electronic part of the board. The other part of the card contains 2 function blocks: The part that sychronizes the lightpen with the video output - it muist detect exactly the millisecond where the pixels are generated in the picture that display that area which shall be selected by the user. In that very moment the pixels get displayed the transistor passes over a switching pulse to the card and the card must pass over that detected signal to the software for the further handling and switch to the selected menuitem.

The other part of the electronic at the card the pulses setup by the soundconfiguration is prepared before it´s handed over to the audiopart. This primary audiopart determines such things like frequency, pulseduration and other parameters that have been selected by the software and passed over to the other frontcard. The connector on the top of the card passes over that data to this card.

So in a very unique way you may call the first card (front card) to be the part for handling software and memory storing the parameters and menuoptions and at this second card (rear card) there is a kind IO handling and a kind of synthisizergeneration for waveforms.

here is the view to the populated side of the second (rear) card:

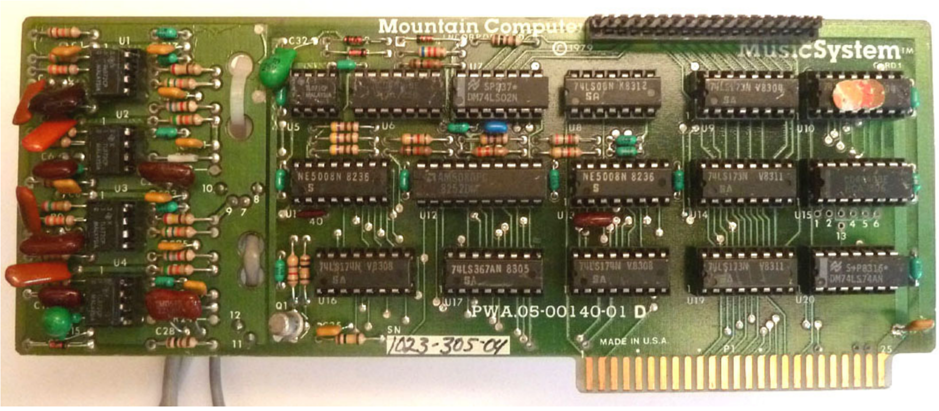

and here is the view to the soldering side of this second (rear) card:

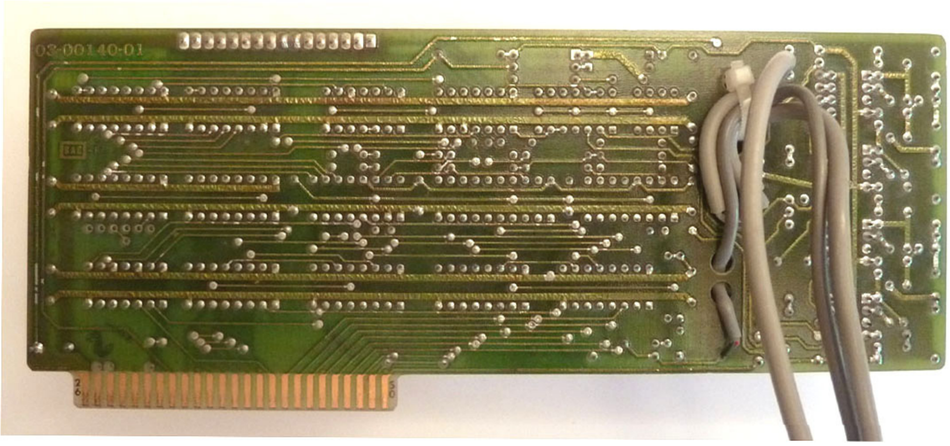

and here is the view to the "external" connection parts of this card : the light pen and the 2 audio-output- connectors.

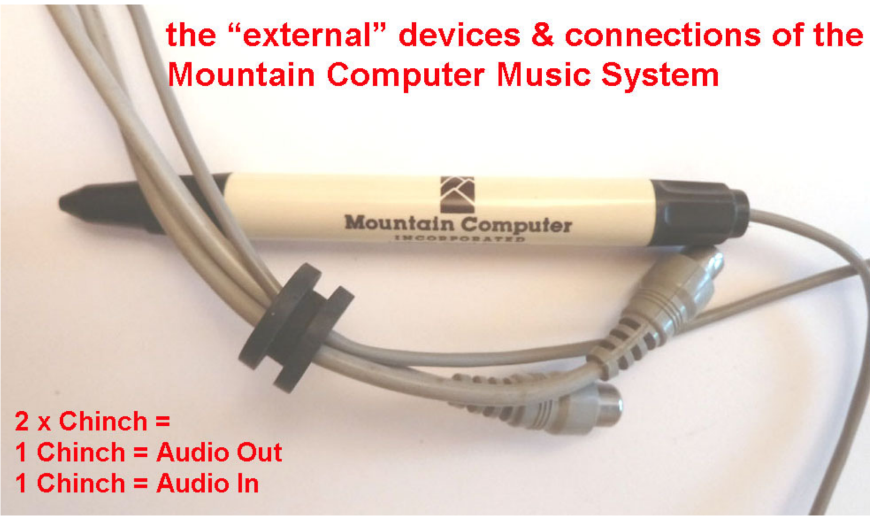
the "external" devices & connections of the
Mountain Computer Music System
Mountain Computer
INCORPORATED
2 x Chinch =
1 Chinch = Audio Out
1 Chinch = Audio In

so next here a view inside of the lightpen - it only contains a lightsensitive switching transistor :

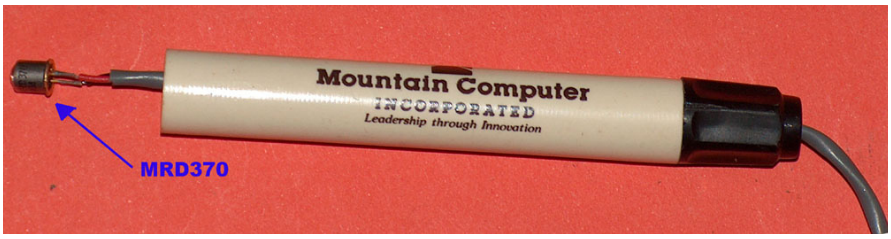
Mountain Computer
INCORPORATED
Leadership through Innovation
MRD370

Here is the componentlayout of the card:

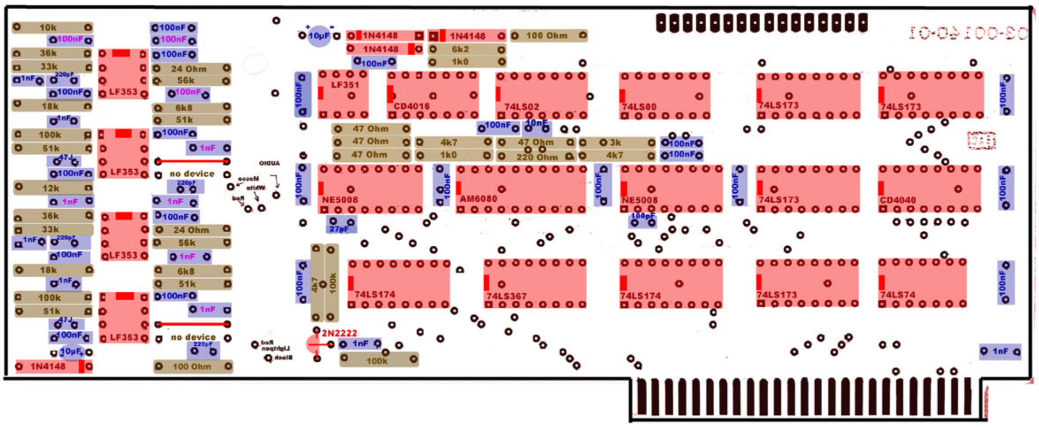
03-00140-01
LF353
LF351
CD4016
74LS02
74LS00
74LS173
NE5008
AM6080
CD4040
74LS174
74LS367
74LS74
2N2222
1N4148
10µF
100nF
1nF
220pF
27pF
10k
36k
33k
18k
100k
51k
12k
24 Ohm
56k
6k8
6k2
1k0
4k7
3k
47 Ohm
220 Ohm
100 Ohm
no device
AUDIO
Masse
White
Red
Lightpen
Black

And here is a view to the solderside after it has been converted to be blue layer for later analysis of the card:

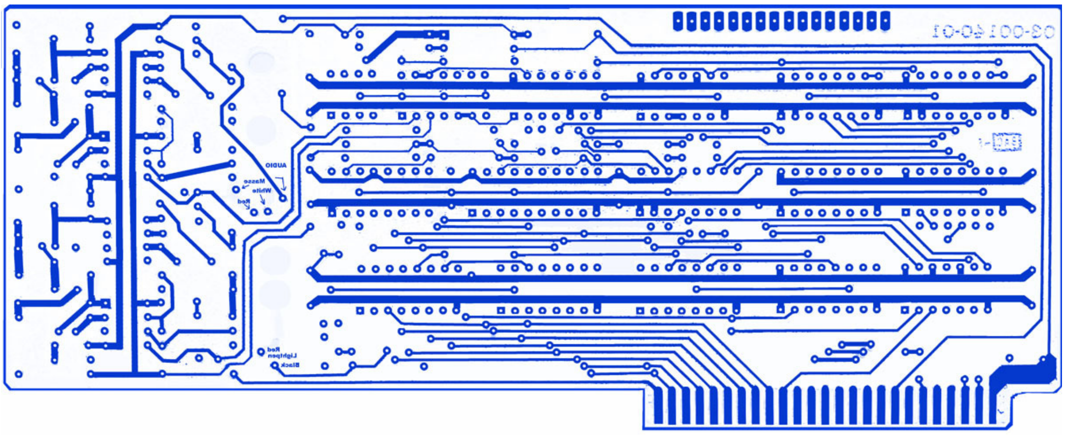
03-00140-01
AUDIO
Masse
White
Red
Lightpen
Black

So now here is the red layer from componentside:

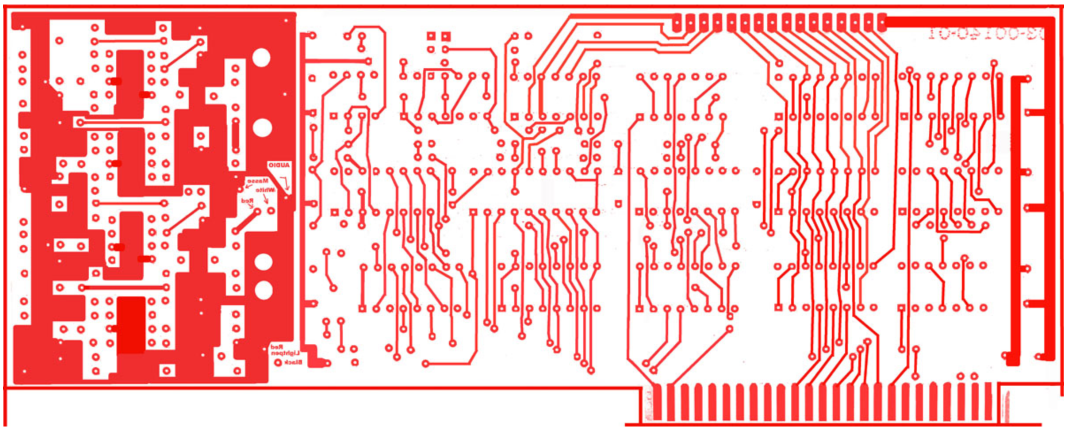

and here is the combination of both layers together:

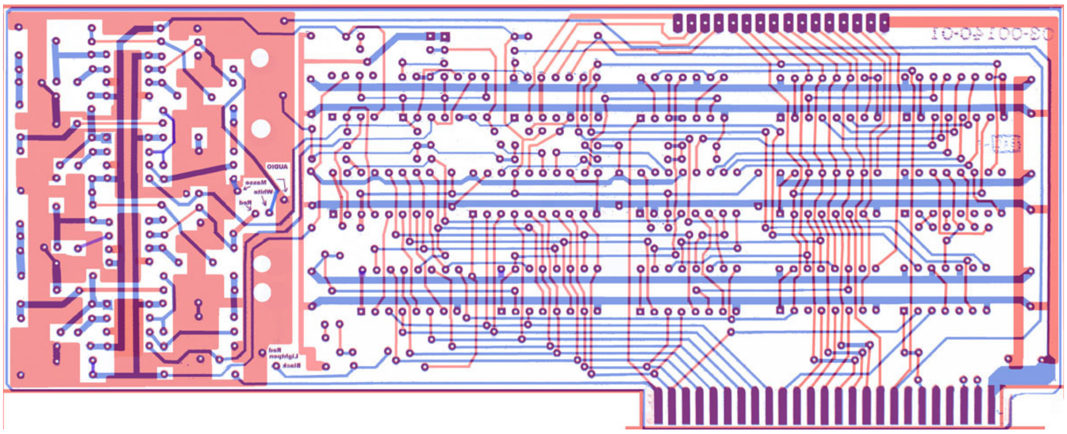

So finally here is now also the circuitplan of the second card of the Mountain Computer Music System :

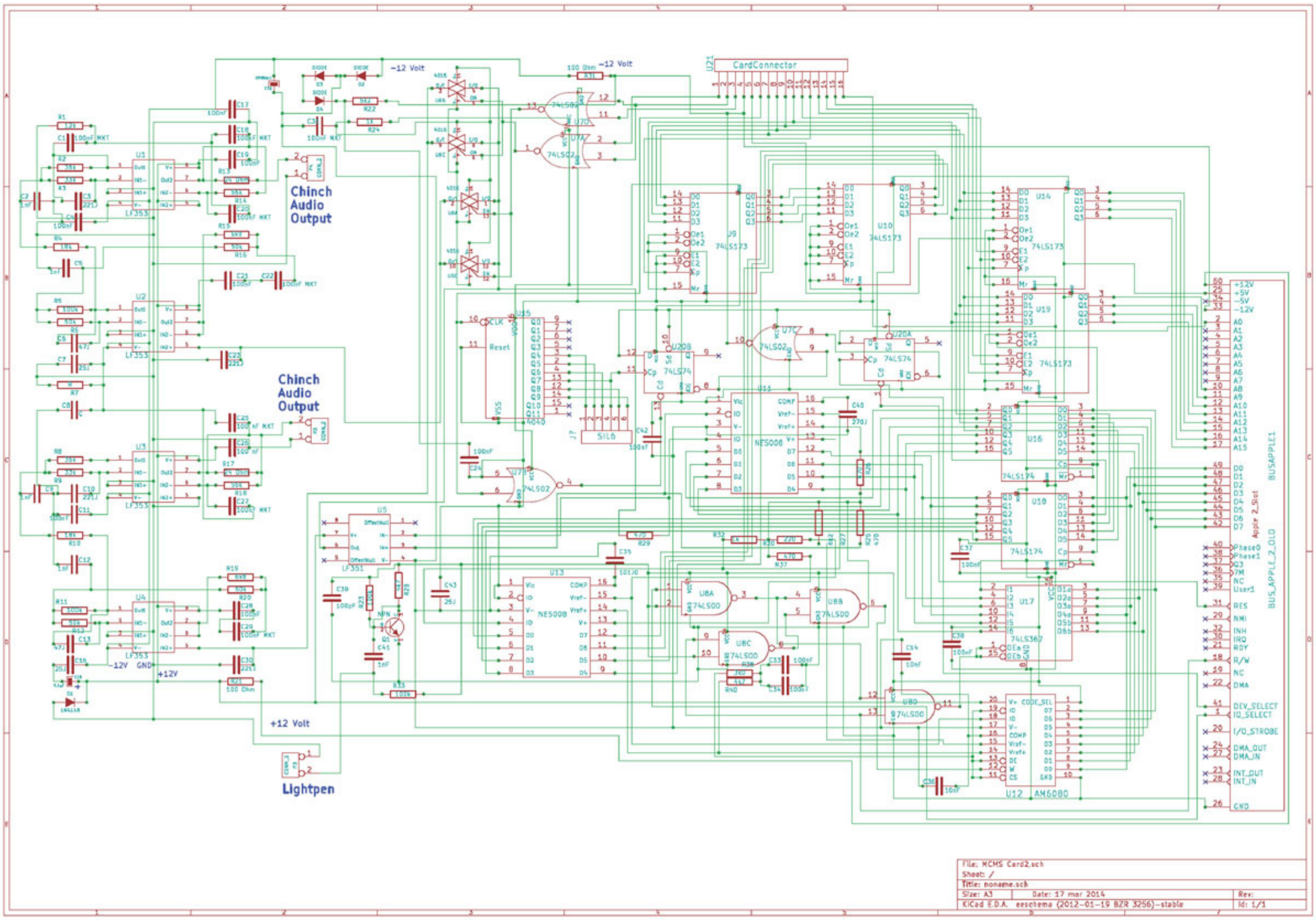
-12 Volt
100 Ohm -12 Volt
U21 CardConnector
Chinch Audio Output
Chinch Audio Output
Lightpen
+12 Volt
-12V GND +12V
U1 LF353
U2 LF353
U3 LF353
U4 LF353
U5 LF351
U9 74LS173
U10 74LS173
U14 74LS173
U19 74LS173
U15 4040
J7 SIL6
U7 74LS02
U20 74LS74
U11 NE5008
U13 NE5008
U16 74LS174
U18 74LS174
U17 74LS367
U8 74LS00
U12 AM6080
BUSAPPLE1
Apple 2 Slot
BUS_APPLE_2_OLD
File: MCMS Card2.sch
Sheet: /
Title: noname.sch
Size: A3
Date: 17 mar 2014
Rev:
KiCad E.D.A. eeschema (2012-01-19 BZR 3256)-stable
Id: 1/1

As explained in the previous page the connection between both cards in my system was not reliable. Therefor i replaced the connection in my system with goldplated extended pinconnectors. The following pictures show this replacing solution. In the first picture i have placed both cards apart from each other to mahe the connection visible. In the second and third picture the cards are both plugged together and set in their default slots.

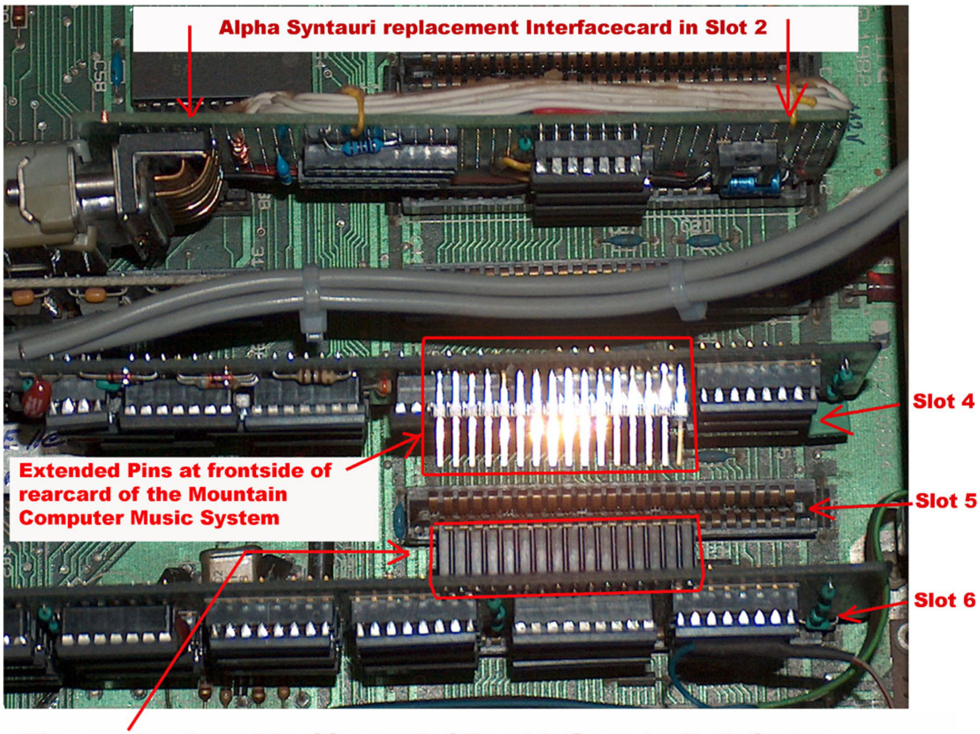
Alpha Syntauri replacement Interfacecard in Slot 2
Slot 4
Extended Pins at frontside of rearcard of the Mountain Computer Music System
Slot 5
Slot 6

Pinconnector at rearside of frontcard of Mountain Computer Music System
remark: distance of one additional slot left in this picture to demonstrate length of extended pins !

In this picture both cards of the Mountain Computer Music System are plugged together to each other and are placed in the regular default slots 4 and 5 ! The result : The card have perfect reliable connection to each other !

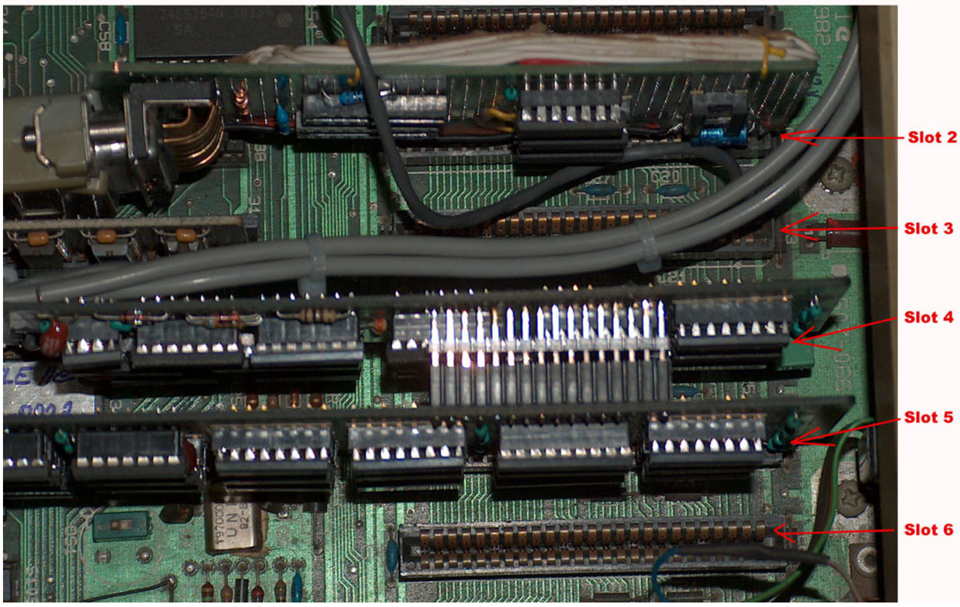
Slot 2
Slot 3
Slot 4
Slot 5
Slot 6

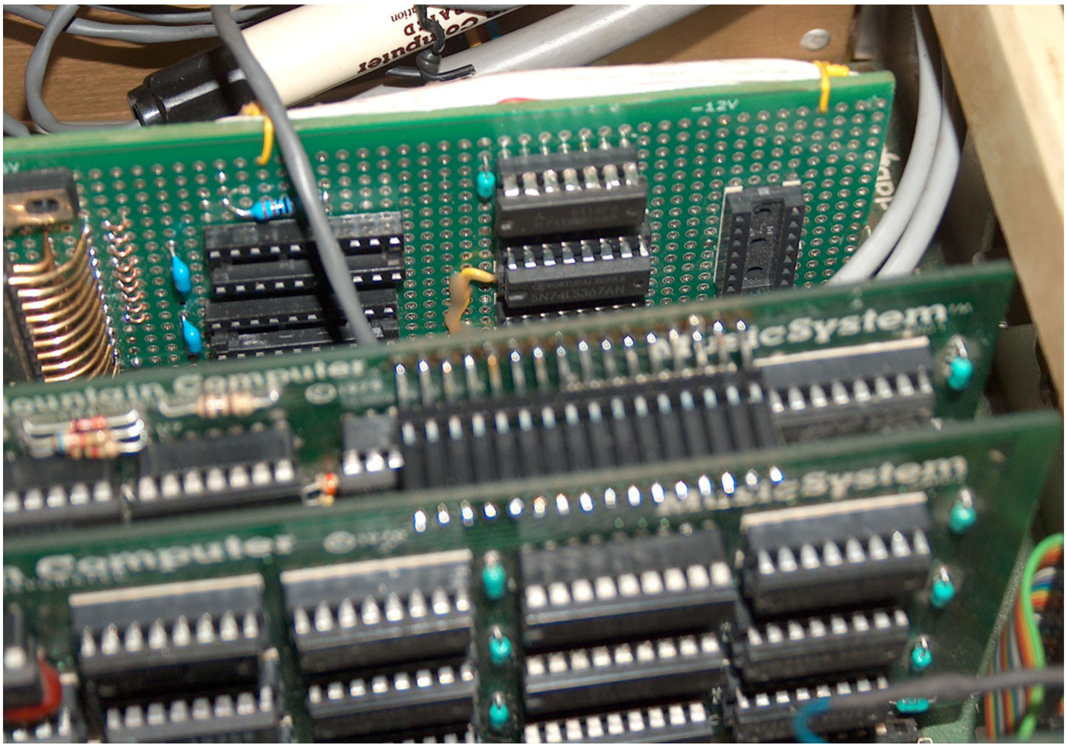

<= back to previous page	go ahead to next page =>

....

◄ turn back to the indexpage ⟵

due to european laws and german court decision:
I hereby declare no responsibility to any "deep links" resulting from the links in this page. I have no influence to the pages linked hereby in this page and the contents in those pages. I therefor can´t take any kind of responsibility to contents in the pages, where these links direct the readers browser to nor to the contents resulting from following up links from those pages. The reference to contents by this links is dependent ro the status of the date when the links have been set (April 2013) and it might occur that references and contents may change by the fact that domains may have been discontinued from their former owners. In such cases i can´t take any kind of responsibility to the changed contents. this is specialy valid to banners, advertisements or merchandising links in the targeted pages.

© copyright: Harro Walsh 2013

APPLEBOX

the alpha syntauri system
a ancient synthisizer concept for the Apple II

details and circuitplan of the piano-keyboard part of the alpha syntauri

During the distribution of the alpha syntauri system there have been 2 different pianokeyboards common to sales:
a version with 48 keyswitches was distributer with the early systems,
while later systems have been distributed with a 61 keyswich pianokeyboard.
Another difference was that the later version was able to recognize velocity, while the early version didn´t do that.

This page displays the later common version with 61 keyswitches.

In the earlier pages the keyboard has been displayed in general. In this part we´ll take a closer view to the details of the piano-keyboard part of the alpha syntauri before the signals from the keyboard enter the decoder PCB inside of the keyboard case.

The keyboard has 61 keyswitches. To enable the user to assign each single key of the keyboard to it´s correct part in the circuitplan i have numbered the keys in the picture below. According also to this picture and the circuitplan you may recognize the "grouping" of each 8 keyswitches in a keyblock. This is also due to the "grouping" inside of the keyboard where 8 keys are collected to one group by the related "upper connector bar" and "lower connector bar". This will be explained later in other pictures.

Here is the picture with the numbering of the keyswitches and it´s related "piano keys":

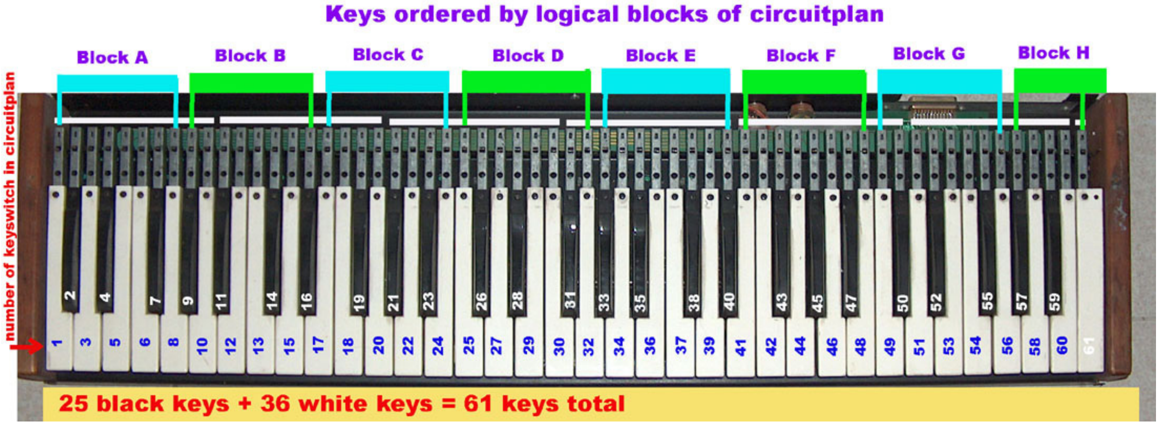
Keys ordered by logical blocks of circuitplan
Block A
Block B
Block C
Block D
Block E
Block F
Block G
Block H
number of keyswitch in circuitplan
2
4
7
9
11
14
16
19
21
23
26
28
31
33
35
38
40
43
45
47
50
52
55
57
59
1
3
5
6
8
10
12
13
15
17
18
20
22
24
25
27
29
30
32
34
36
37
39
41
42
44
46
48
49
51
53
54
56
58
60
61
25 black keys + 36 white keys = 61 keys total

and here is the related circuitplan:

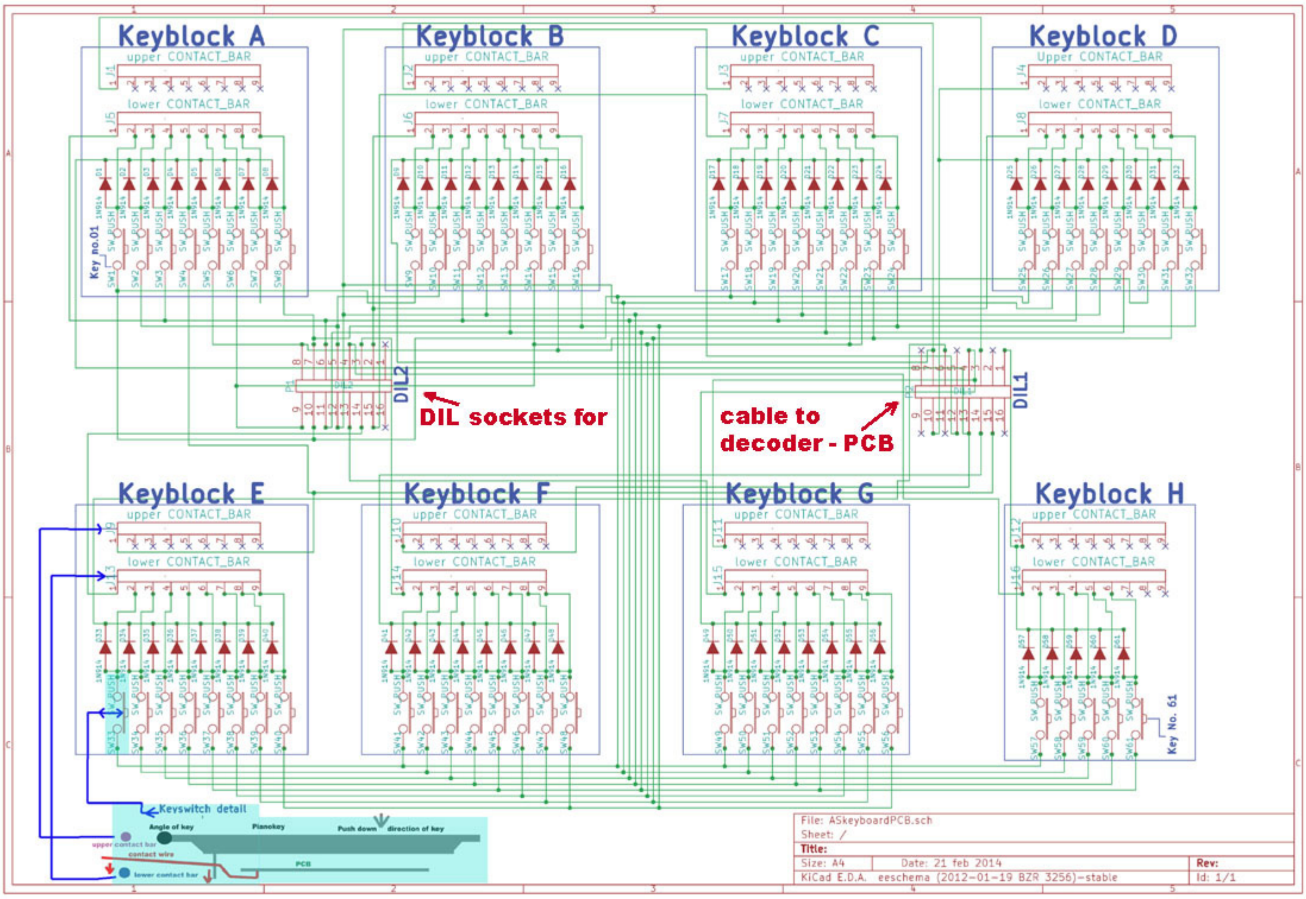
Keyblock A
Keyblock B
Keyblock C
Keyblock D
upper CONTACT_BAR
lower CONTACT_BAR
Key no.01
DIL2
DIL1
DIL sockets for
cable to
decoder - PCB
Keyblock E
Keyblock F
Keyblock G
Keyblock H
Key No. 61
Keyswitch detail
Angle of key
Pianokey
Push down
direction of key
upper contact bar
contact wire
lower contact bar
PCB
File: ASkeyboardPCB.sch
Sheet: /
Title:
Size: A4
Date: 21 feb 2014
Rev:
KiCad E.D.A. eeschema (2012-01-19 BZR 3256)-stable
Id: 1/1

to recognize the details of the keyswitches here some more pictures of that section:

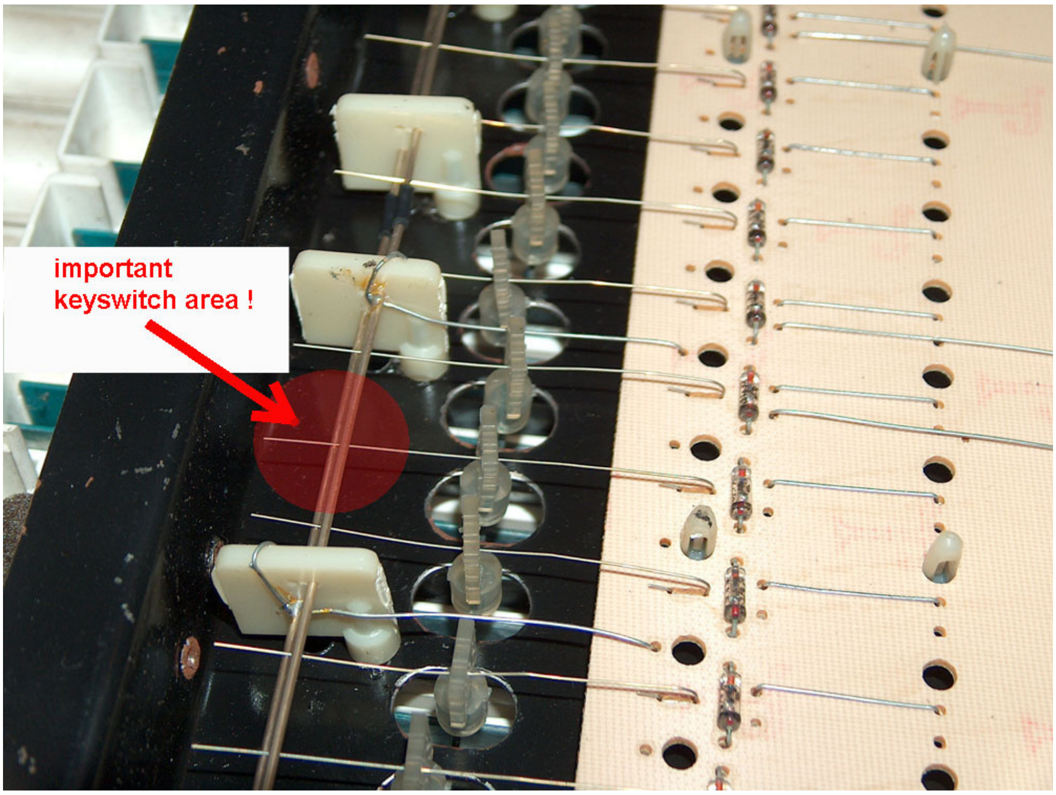
important
keyswitch area !

and here the second picture from another viewpoint:

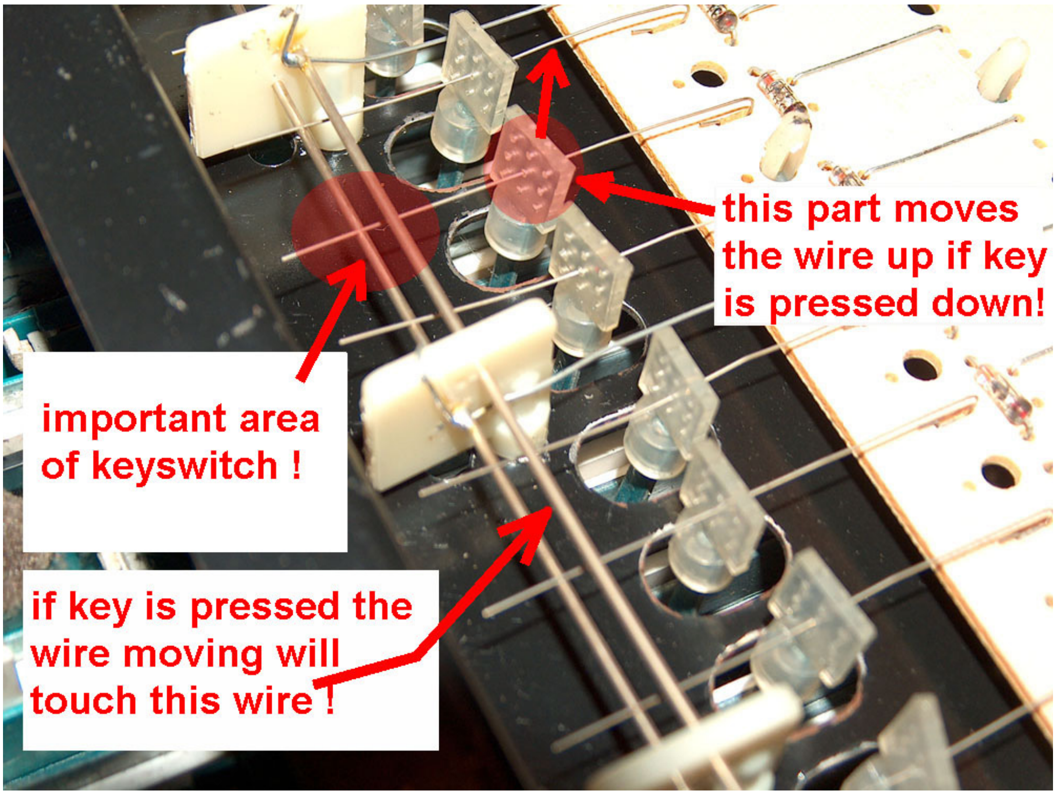
this part moves the wire up if key is pressed down!
important area of keyswitch !
if key is pressed the wire moving will touch this wire !

and here is the pinout of the cable between the Apple II interfacecard and the keyboard:

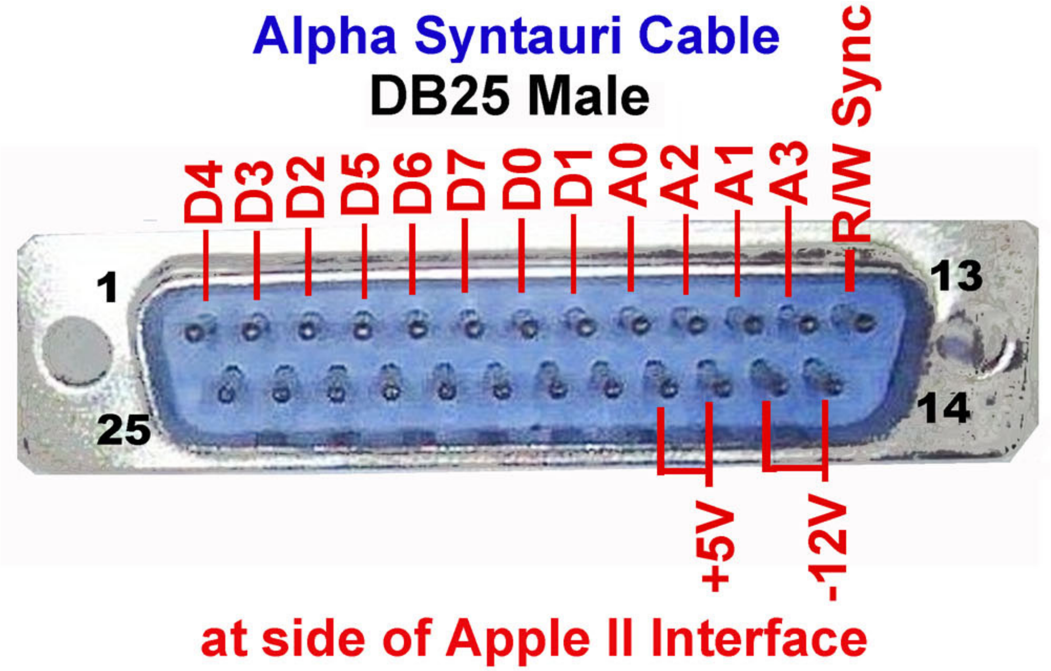
Alpha Syntauri Cable
DB25 Male
D4
D3
D2
D5
D6
D7
D0
D1
A0
A2
A1
A3
R/W Sync
1
13
25
14
+5V
-12V
at side of Apple II Interface

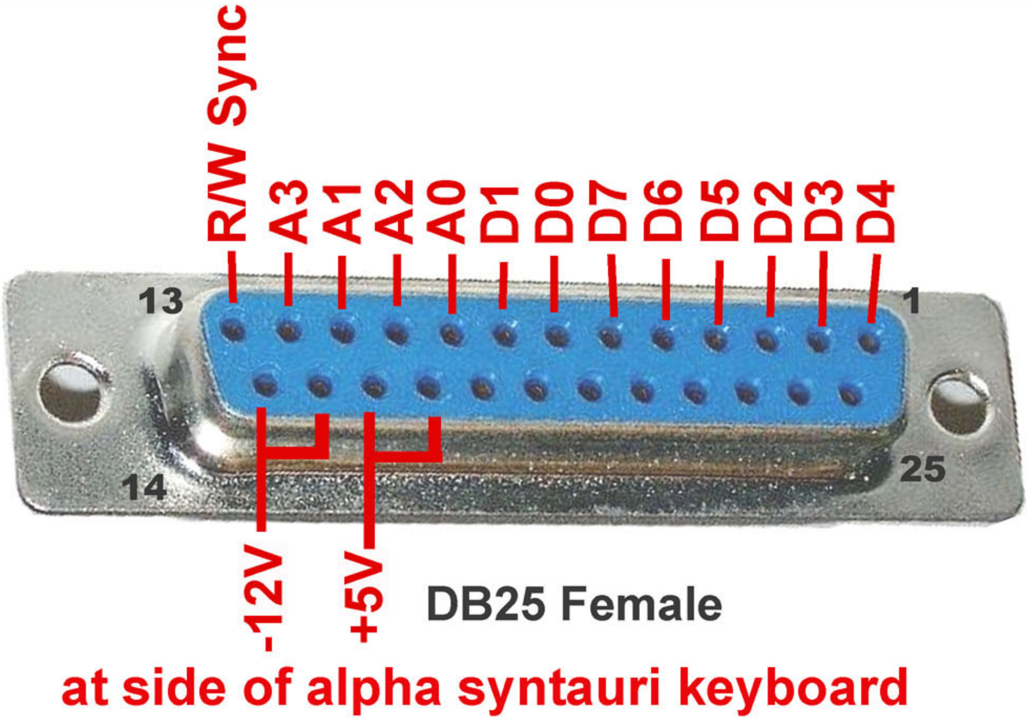
R/W Sync
A3
A1
A2
A0
D1
D0
D7
D6
D5
D2
D3
D4
13
1
14
25
-12V
+5V
DB25 Female
at side of alpha syntauri keyboard

<= back to previous page

go ahead to next page =>

....

....

◄ turn back to the indexpage ⟵

due to european laws and german court decision:
I hereby declare no responsibility to any "deep links" resulting from the links in this page. I have no influence to the pages linked hereby in this page and the contents in those pages. I therefor can´t take any kind of responsibility to contents in the pages, where these links direct the readers browser to nor to the contents resulting from following up links from those pages. The reference to contents by this links is dependent ro the status of the date when the links have been set (April 2013) and it might occur that references and contents may change by the fact that domains may have been discontinued from their former owners. In such cases i can´t take any kind of responsibility to the changed contents. this is specialy valid to banners, advertisements or merchandising links in the targeted pages.

© **copyright: Harro Walsh 2013**

APPLEBOX

the alpha syntauri system
a ancient synthisizer concept for the Apple II
The early beginning with the ALF card

At the beginning the alpha syntauri was distributed with the ALF MC01 card. This was due to the fact that the card was rather cheap and it was rather cheap attempt of experiments to get a system with the pianokeyboard up and running. In later more common distribution the company decided to use the system with the cards from tha Mountain Computer Music System. Allthough that two cards have been in those days much more expensive the crew at syntauri decided to use that system, because it had not only better performance at sound output, but also the ability to use a lightpen as input device.

Here the component layout:

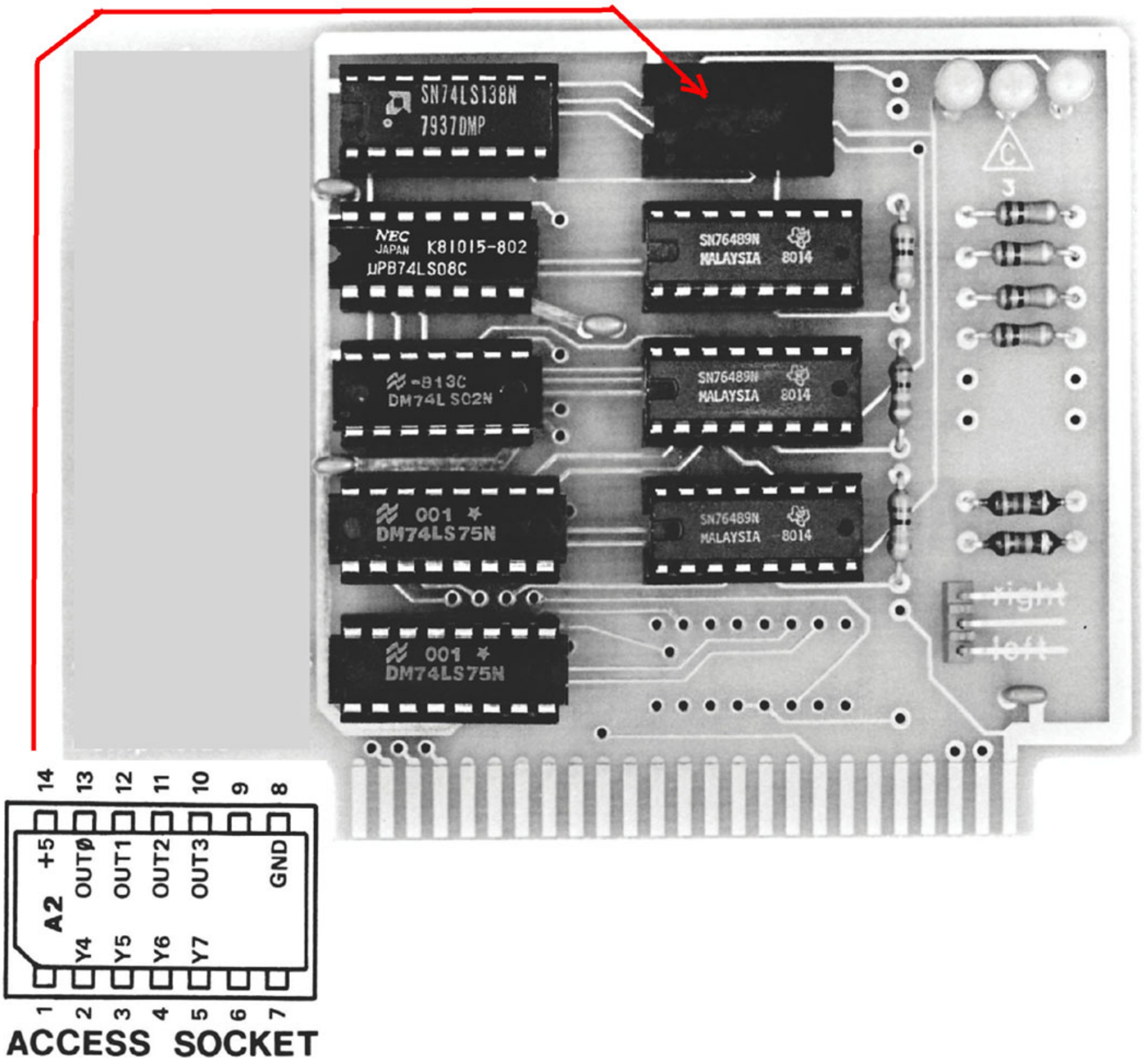
SN74LS138N
7937DMP
NEC JAPAN K81015-802
μPB74LS08C
-813C
DM74LS02N
001
DM74LS75N
001
DM74LS75N
SN76489N MALAYSIA 8014
SN76489N MALAYSIA 8014
SN76489N MALAYSIA 8014
C
right
left
14
13
12
11
10
9
8
+5
OUT0
OUT1
OUT2
OUT3
GND
A2
Y4
Y5
Y6
Y7
1
2
3
4
5
6
7
ACCESS SOCKET

Here the picture of the solderside as layer:

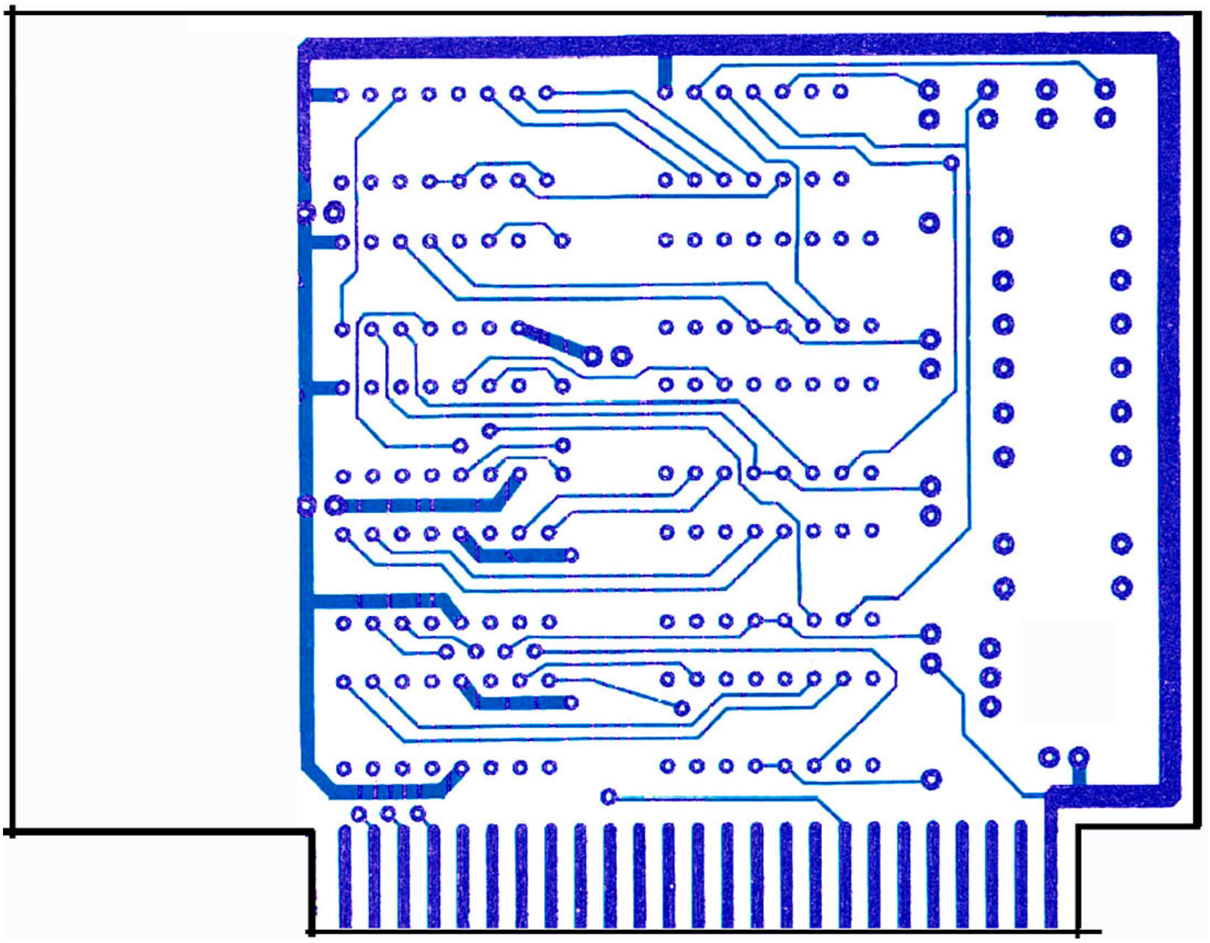

And here the view to the componentside as layer:

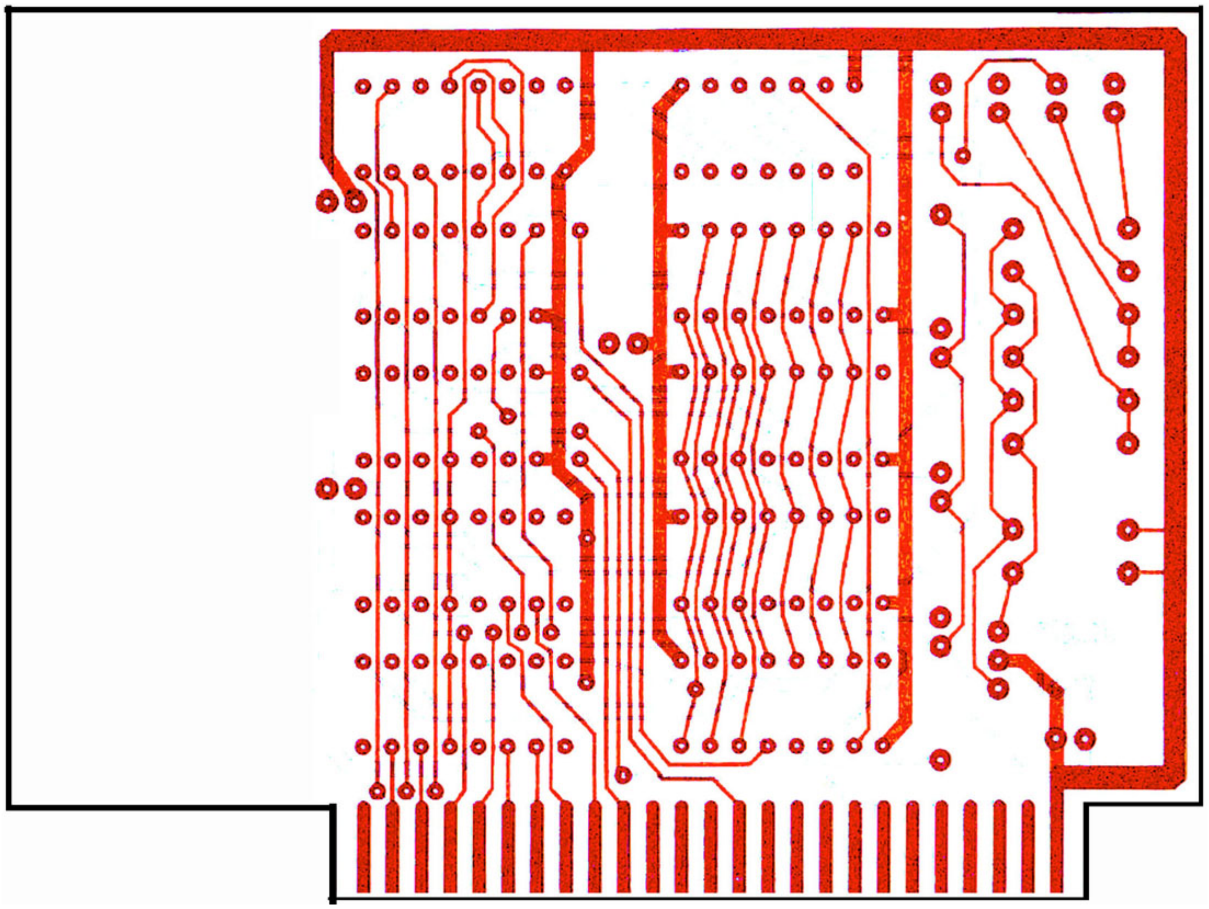

'Here again the combination of both layers:

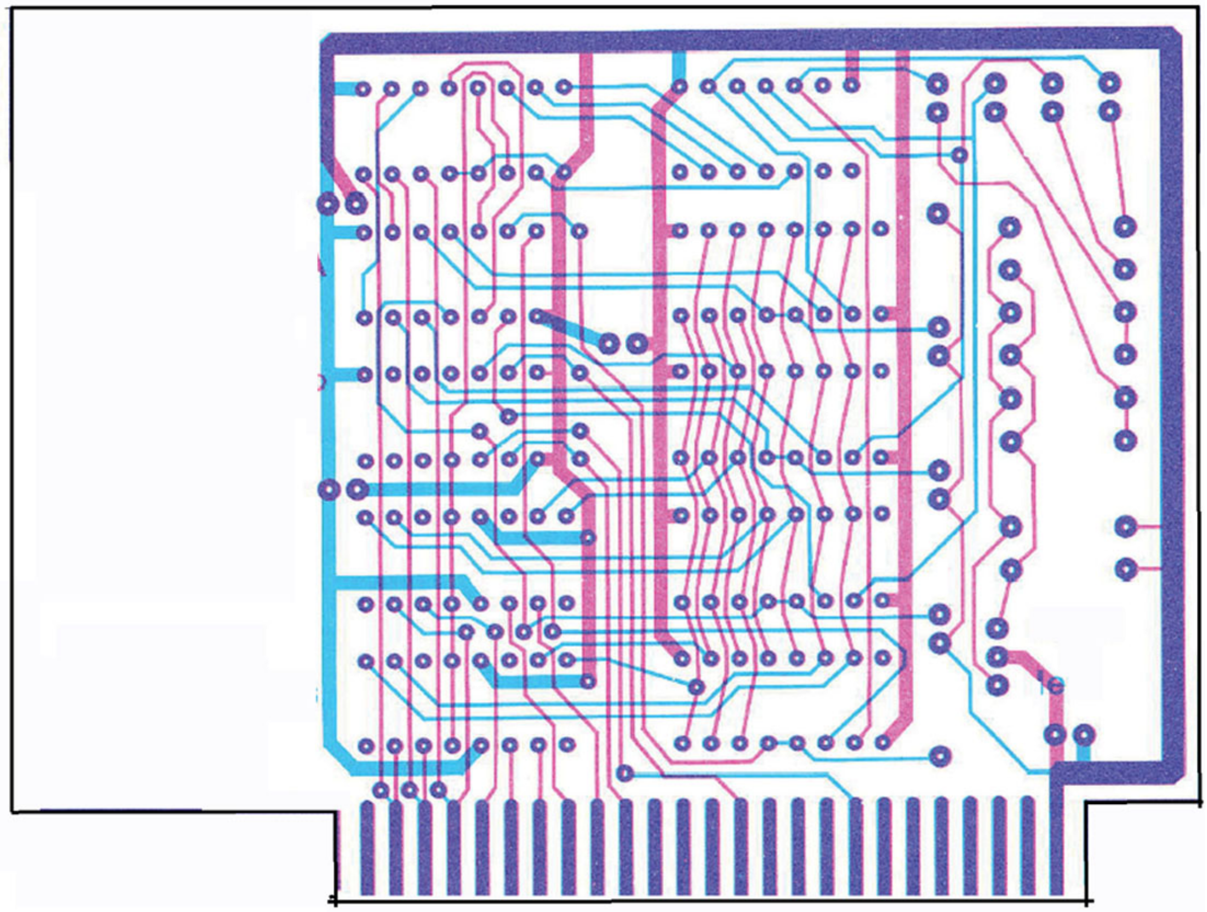

and here is the schematic:

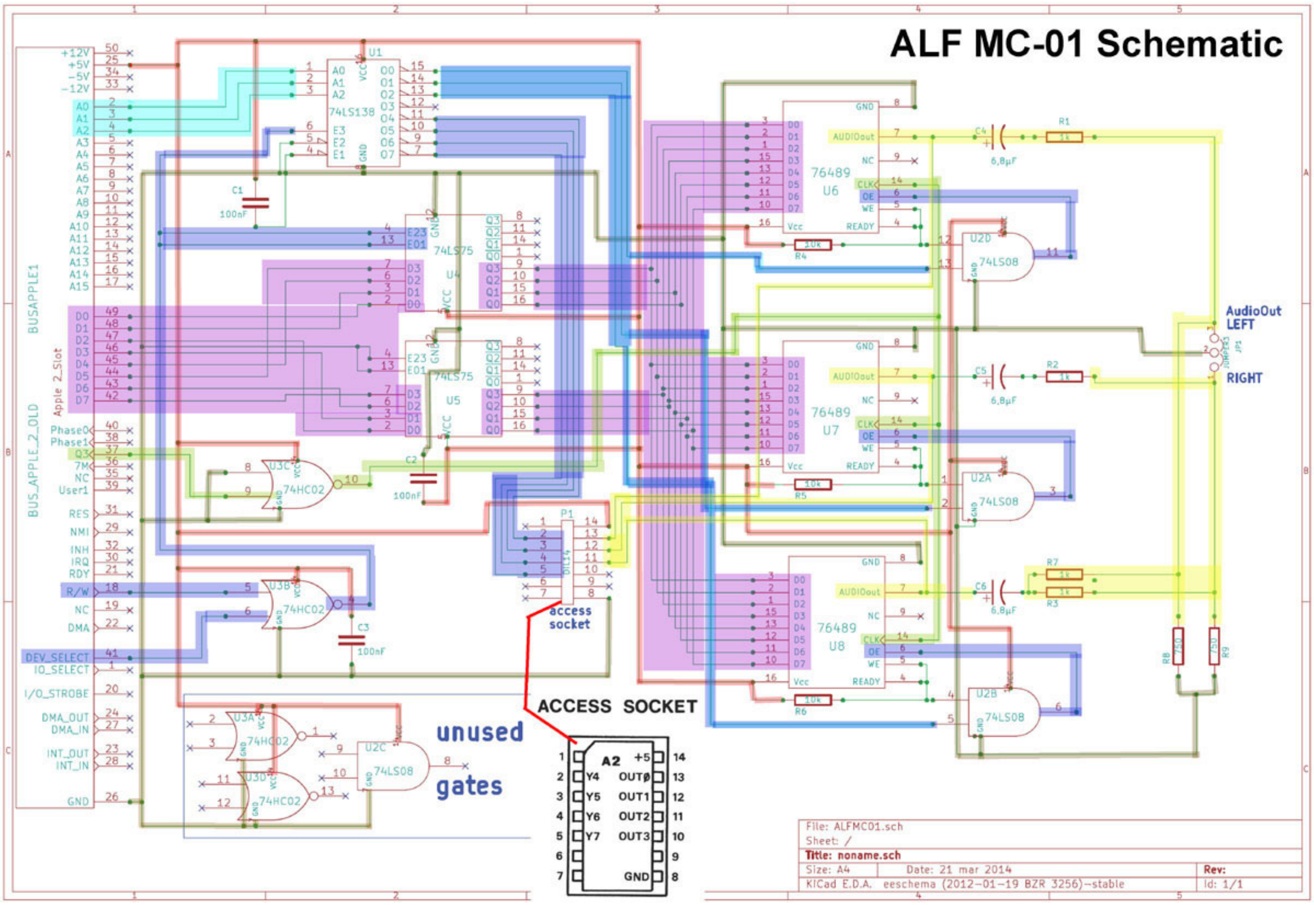
ALF MC-01 Schematic
BUSAPPLE1
BUS_APPLE_2_OLD
Apple 2_Slot
+12V
+5V
-5V
-12V
A0
A1
A2
D0
D1
D2
D3
D4
D5
D6
D7
Phase0
Phase1
Q3
7M
User1
RES
NMI
INH
IRQ
RDY
R/W
DMA
DEV_SELECT
IO_SELECT
I/O_STROBE
DMA_OUT
DMA_IN
INT_OUT
INT_IN
GND
U1
74LS138
C1
100nF
74LS75
U4
U5
U3C
74HC02
C2
100nF
U3B
C3
100nF
P1
access socket
U3A
U3D
U2C
74LS08
unused gates
ACCESS SOCKET
A2
Y4
Y5
Y6
Y7
+5
OUTØ
OUT1
OUT2
OUT3
GND
76489
U6
U7
U8
AUDIOout
CLK
OE
WE
READY
Vcc
R4
R5
R6
10k
U2D
U2A
U2B
C4
C5
C6
6,8µF
R1
R2
R3
R7
1k
R8
R9
AudioOut LEFT
RIGHT
JP1
File: ALFMC01.sch
Sheet: /
Title: noname.sch
Size: A4
Date: 21 mar 2014
Rev:
KiCad E.D.A. eeschema (2012-01-19 BZR 3256)-stable
Id: 1/1

<= back to previous page	go ahead to next page =>

....

◄ turn back to the indexpage ⟵

due to european laws and german court decision:
I hereby declare no responsibility to any "deep links" resulting from the links in this page. I have no influence to the pages linked hereby in this page and the contents in those pages. I therefor can´t take any kind of responsibility to contents in the pages, where these links direct the readers browser to nor to the contents resulting from following up links from those pages. The reference to contents by this links is dependent ro the status of the date when the links have been set (April 2013) and it might occur that references and contents may change by the fact that domains may have been discontinued from their former owners. In such cases i can´t take any kind of responsibility to the changed contents. this is specialy valid to banners, advertisements or merchandising links in the targeted pages.

© **copyright: Harro Walsh 2013**

APPLEBOX

the alpha syntauri system
a ancient synthisizer concept for the Apple II

making of a replacement for the missing IFcard of the alpha syntauri Keyboard

In the upper part of the page there is the description of making a "prototype looking card" while in the lower part of the page there is the description and the needed files for ordering a professional like looking replacement of the Interfacecard.

First of all after i have recieved all parts of the alpha syntauri system with the Mountain Computer Music System except of the missing alpha syntauri Apple II Interfacecard i decided to speed up things by making "on the fly" a "prototype like" interfacecard. the target is to get very fast a working setup, that permits me to check all components and the availiable software for correct basic functions. While entering data in the CAD system and getting the files required for ordering a replacement PCB with professional look i have the chance to get proof if anything is missing and that the circuitplan made for the Interfacecard turns out to be correct and gets verified. Besides i may recognize if the files i have picked from the archives in the internet for the system are working correct or if i have to continue hunting for somethiong that still is missing.

At the stage this picture has been made i only have mede the connections for the powersuppplylines. I keep the layout of the card same as the original.

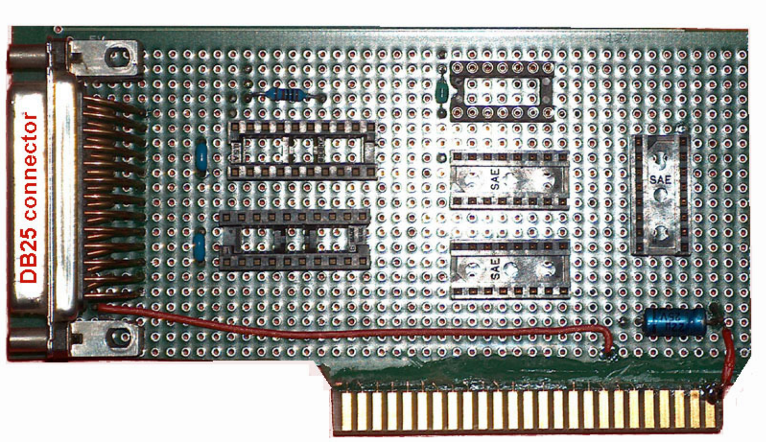

That´s the rear soldering side of the card at this point:

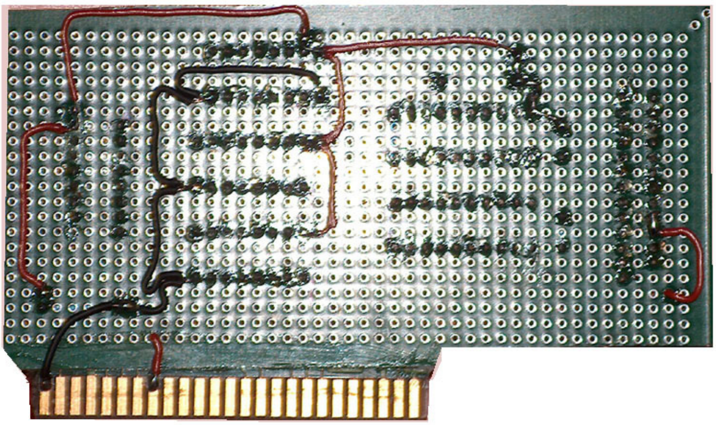

At this stage i have have made the card up to the point that i was able to detect from traces recognized from the picture of the soldering side and that parts that i was able to detect from the picture of the component side adding only very few parts that i have been able to assume by logic conclusion and knowledge of the internal functions of the used chips. But there are still important parts (related to the R/W line and the timing and the handling of the DevSel connecttion to the Apple II. This lines have been fixed after soldering with 2 component glue to protect the soldered wires from tear off or damage.

Due to still misssing information this prototypecard of the Alpha Syntauri Interface can NOT be COMPLETED ! Therefor also the circuitplan can NOT BE VERIFIED ! Pictures URGENTLY REQUIRED ! See postings above !

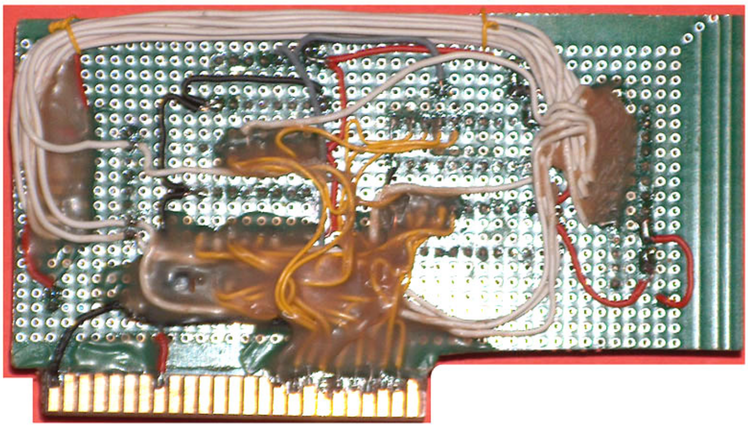

In the mean time i have recieved the upmost missing picture from the USA that displays the unpopulated (in this case even just desoldered) card and therfor i was able to detect the missing connections below of the circuits. So first of all i immediatlly started entering the data in the CAD system and then started with the missing part of the interfacecard.

So here now is the picture of the componentside of that "prototype like" interfacecard. It´s now finished and ready for testing. There is one big difference to the circuitplan: The Adressinglines from A4 to A7 are only connected to the empty sockets and therefor they are NOT used with the communication between Apple II and the alpha syntauri keyboard. Therefor i have left them away in this version. At the replacement interfacecard designed with the CAD system they are of course integrated and connected to the empty sockets - it permits to take signals from that sockets for measurement purposes. So at the card in the now following section that traces are connected exactly like at the original interface card - only the layout of the traces changed due to the fact that the CAD-programm carried out a job of rerouting that traces.

Here is the picture of the componentside of the prototypecard:

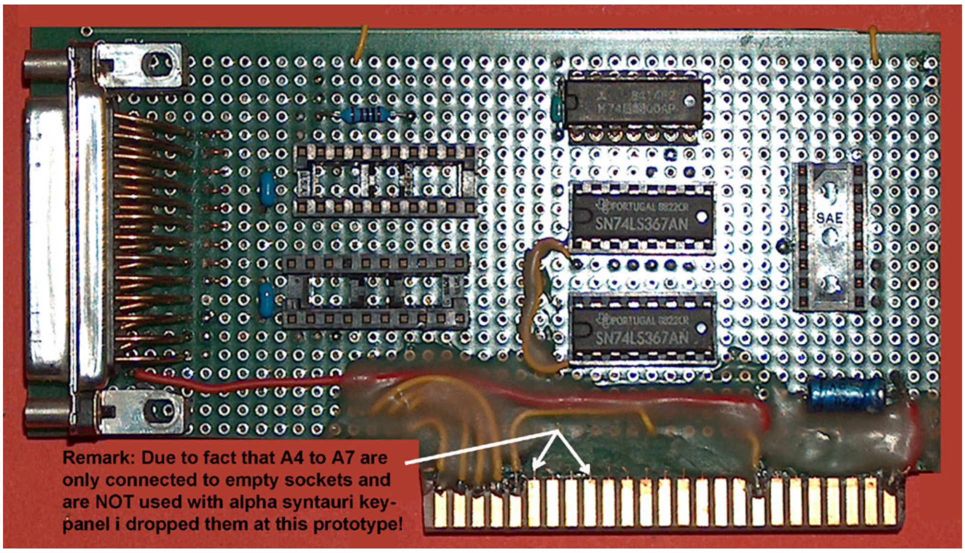

Remark: Due to fact that A4 to A7 are only connected to empty sockets and are NOT used with alpha syntauri key-panel i dropped them at this prototype!

Here is the picture of the solderingside of the prototypecard:

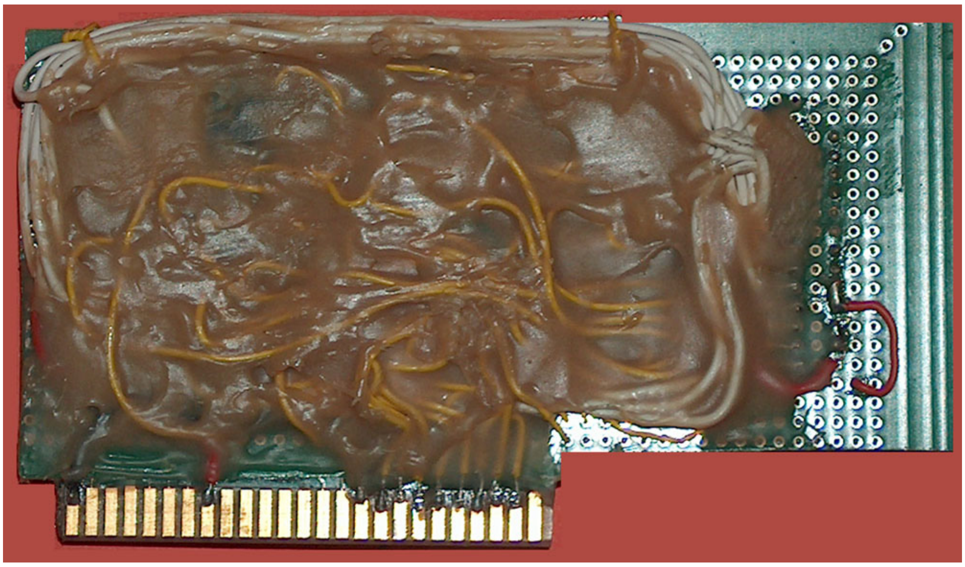

At this point i must state, that for the final documentation i am still searching for pictures of the second version of the interface card that was sold later by alpha syntauri. That version did not have a DB25 connector on the interface card but instead Pinrows on top of the card. See at the bottom of the first page the very last picture. It´s only thing i found about that card. That card was also sold with the ALF card instread of the Mountain Computer Music System. So if anybody has pictures , information, manuals, software of that second version please contact me at Applefritter.com . You may contact me there with my nickname "speedyG".

After finally getting the missing pictures of the Interfacecard which have displayed the traces below the circuits, it was passible to generate the productiondata that enables the user to get a chance of ordering a professional looking replacement interfacecard from any PCB-manufacturer.

This alternate interfacecard is deffent from the original interfacecard by several marks:
I dropped of the empty sockets without use
i flipped the layout due to the fact that at original card the DB25plug connector was heading to the front of the Apple and therefor the thick cable to the alpha syntauri needed to twist around to the rear outlets of the computer - in my design the DB25-connector is set a bit forward bit flipped around - permitting the DB25plg to be connected within the Apple II and the cable running staight back outside of the Apple II without inside twisting.

The following pictures display a new rerouted interfacecard.

here is the circuitplan of this alternate interfacecard:

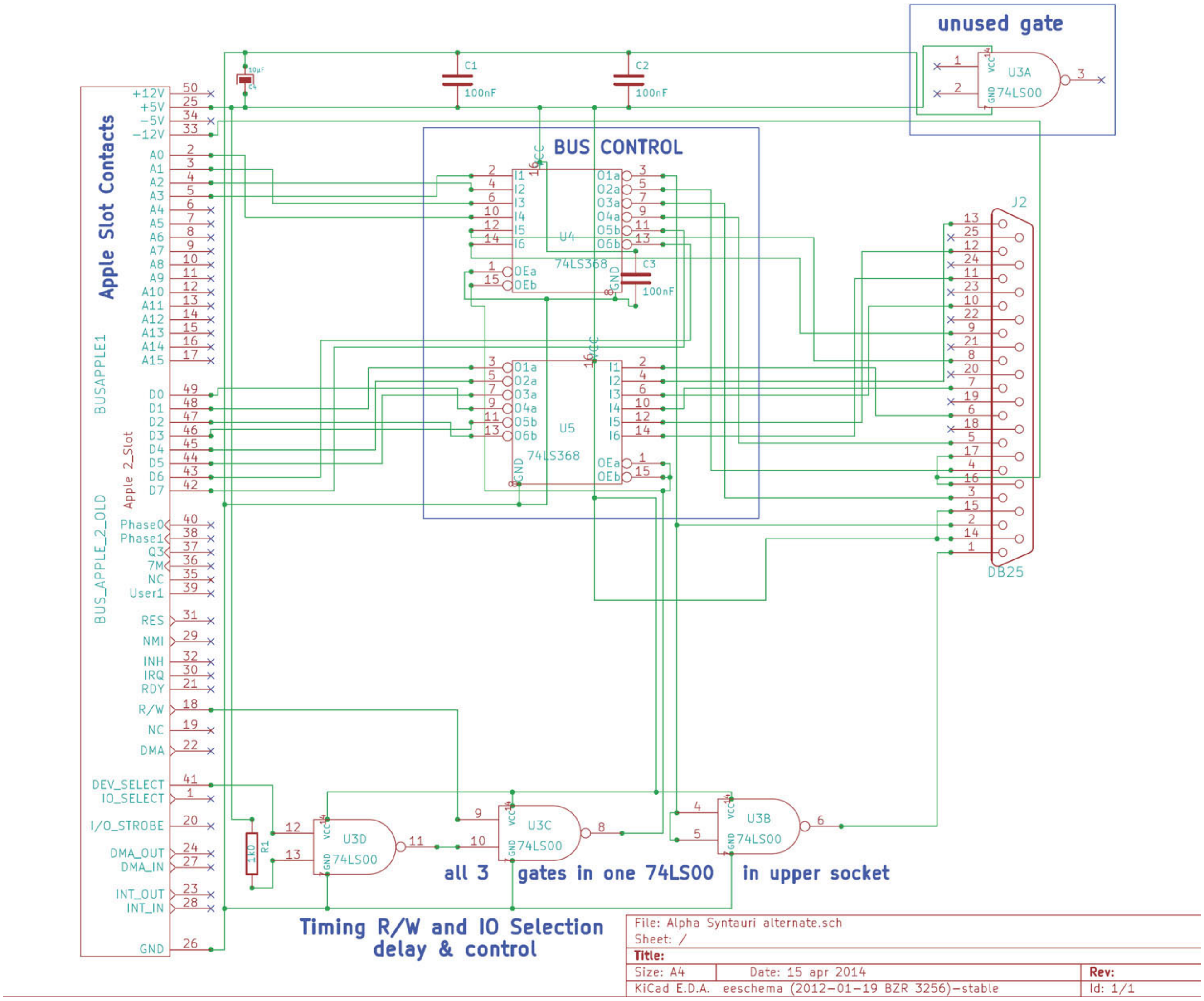
unused gate
U3A
74LS00
C1
100nF
C2
100nF
10µF
C4
BUS CONTROL
U4
74LS368
C3
100nF
U5
74LS368
J2
DB25
Apple Slot Contacts
BUSAPPLE1
Apple 2_Slot
BUS_APPLE_2_OLD
+12V
+5V
-5V
-12V
A0
A1
A2
A3
A4
A5
A6
A7
A8
A9
A10
A11
A12
A13
A14
A15
D0
D1
D2
D3
D4
D5
D6
D7
Phase0
Phase1
Q3
7M
NC
User1
RES
NMI
INH
IRQ
RDY
R/W
NC
DMA
DEV_SELECT
IO_SELECT
I/O_STROBE
DMA_OUT
DMA_IN
INT_OUT
INT_IN
GND
R1
1k0
U3D
74LS00
U3C
74LS00
U3B
74LS00
all 3 gates in one 74LS00 in upper socket
Timing R/W and IO Selection
delay & control
File: Alpha Syntauri alternate.sch
Sheet: /
Title:
Size: A4
Date: 15 apr 2014
Rev:
KiCad E.D.A. eeschema (2012-01-19 BZR 3256)-stable
Id: 1/1

and here now is the view to the combination of both layers:

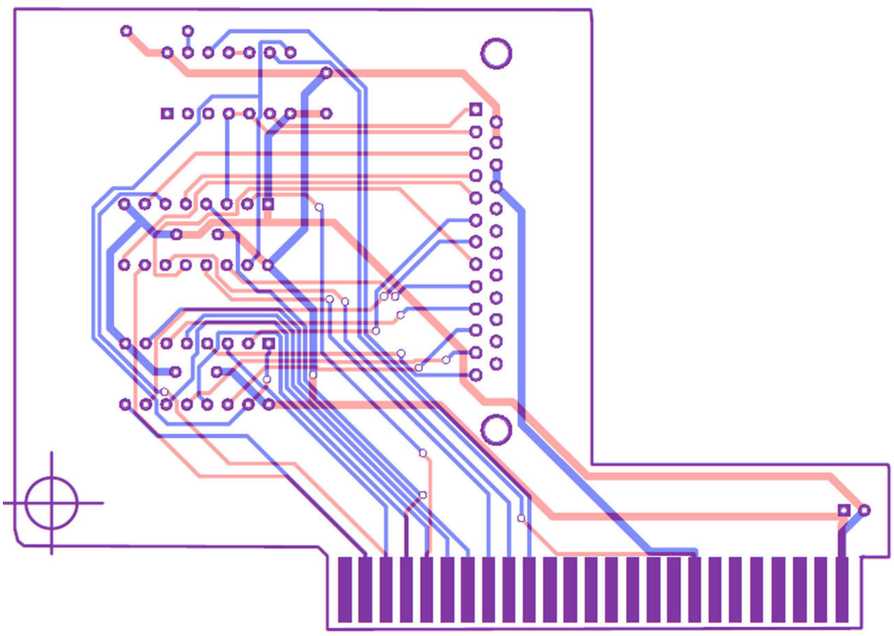

Here is now the solderingside of the new alternate alpha syntauri interfacecard:

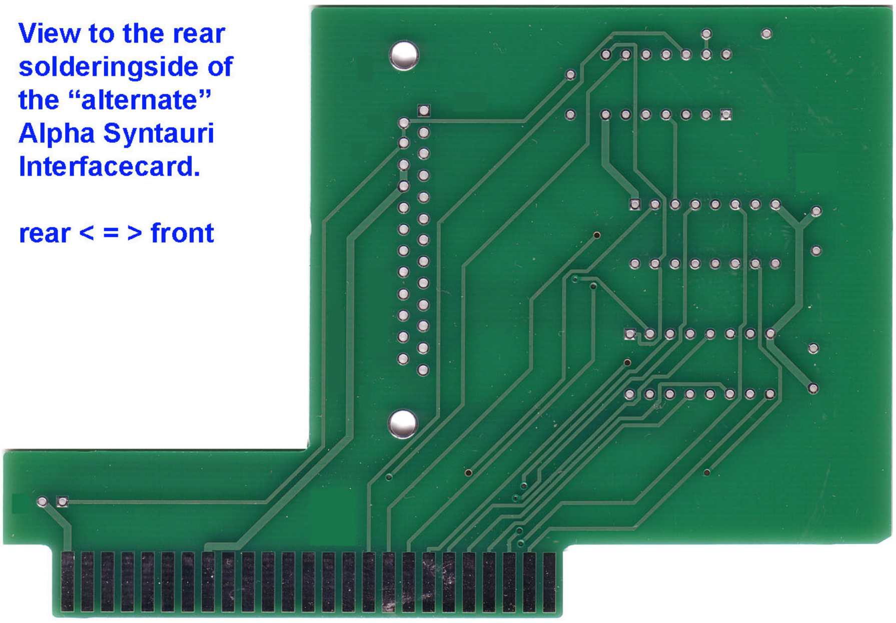
View to the rear solderingside of the “alternate” Alpha Syntauri Interfacecard.
rear < = > front

and here is now the view to the unpopulated componentside of the alternate alpha syntauri interface card:

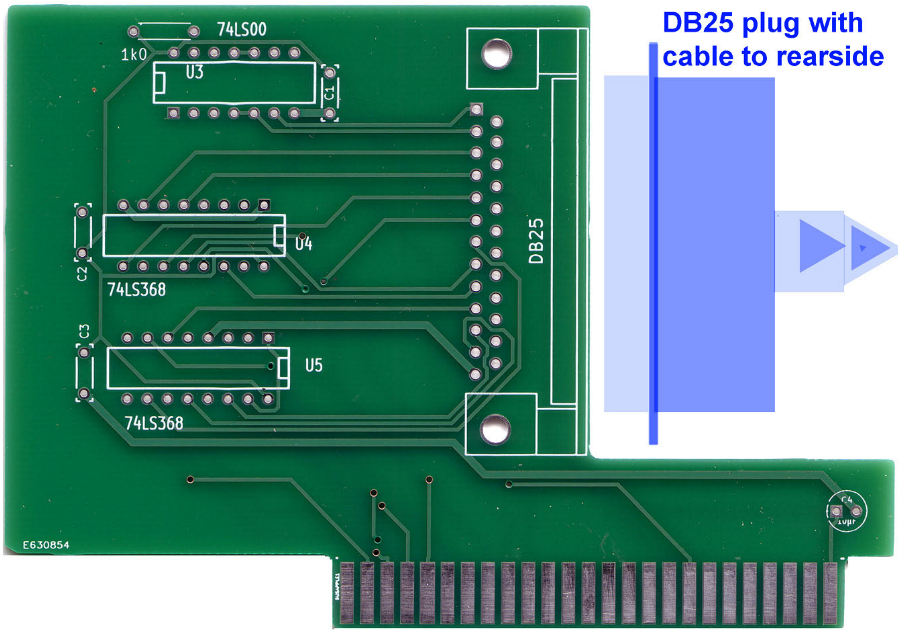
DB25 plug with cable to rearside
74LS00
1k0
U3
C1
C2
U4
74LS368
C3
U5
74LS368
DB25
C4
E630854

finally the view to the population of the card:

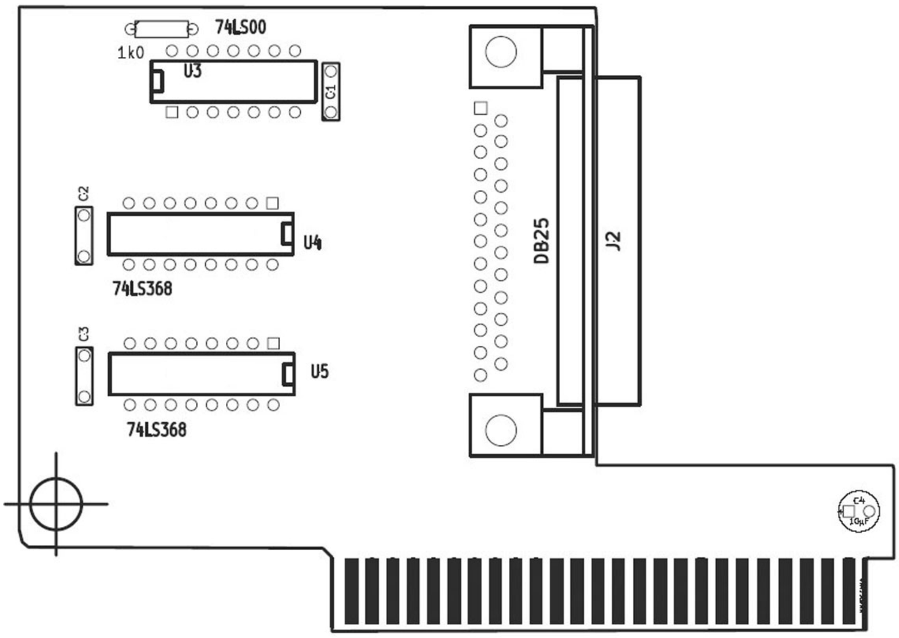

and finally here is the completed and populated interfacecard of the alpha syntauri:

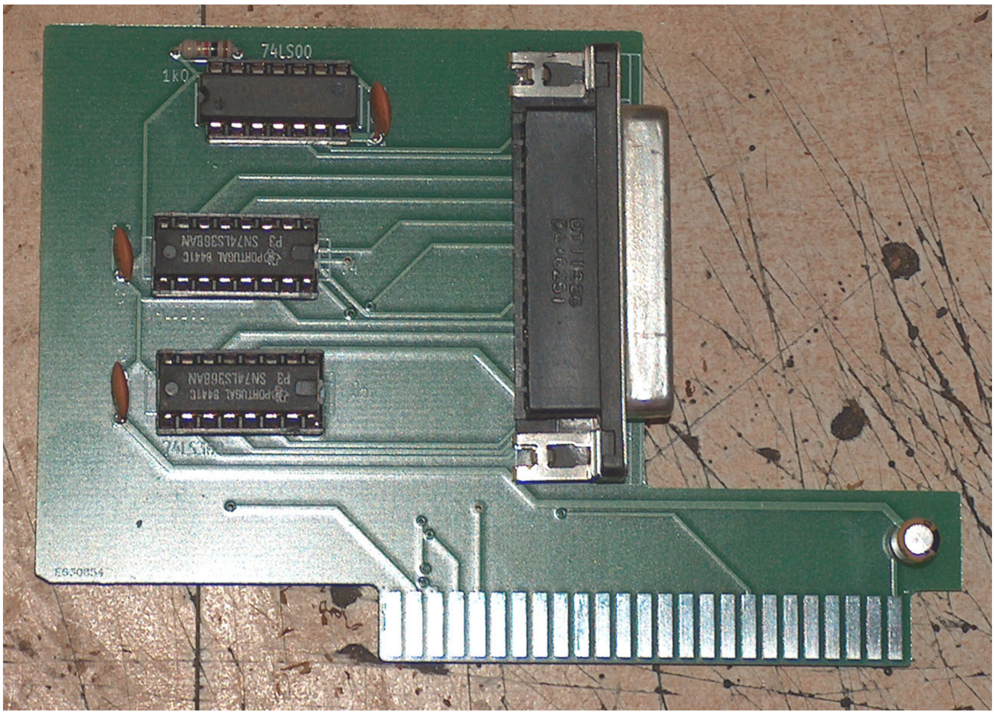

and for those with incomplete system and missing interface is the link to the file that contains the so called "Gerber-files" used for production of the replacement interfacecard and mailed to the PCB manufacturer:

ASalternateGerber.rar

Please recognize :
the measurement unit used in this files is Millimeters / Centimeters
and not inches !
Please inform manufacturer on this important fact !

<= back to previous page	go ahead to next page =>

....

◄ turn back to the indexpage ⟵

due to european laws and german court decision:
I hereby declare no responsibility to any "deep links" resulting from the links in this page. I have no influence to the pages linked hereby in this page and the contents in those pages. I therefor can´t take any kind of responsibility to contents in the pages, where these links direct the readers browser to nor to the contents resulting from following up links from those pages. The reference to contents by this links is dependent ro the status of the date when the links have been set (April 2013) and it might occur that references and contents may change by the fact that domains may have been discontinued from their former owners. In such cases i can´t take any kind of responsibility to the changed contents. this is specialy valid to banners, advertisements or merchandising links in the targeted pages.

© copyright: Harro Walsh 2013

APPLEBOX

the alpha syntauri system
a ancient synthisizer concept for the Apple II
Downloadpage of aAlpha Syntauri and
Mountain Computer Music System

Please note: Diskimages are to be used with ADT. That program permits user to keep this images at MAC or PC and transmit images by serial cable to Apple with Super Serial Card and generate at local Floppydrive on Apple the desired Disks in 5,25 "format (single sided, double density = 35 Tracks = 140 kB) . The letters ADT contain link to related pages.
Please first read carefully ADT instructions related to your availiable hardware !

Downloadable File:	REMARKS:	Typ:	Filename / Link:
The Alpha Syntauri System:			
General Program for use with alpha syntauri (system setup)		💾	ALPHAPLUS.dsk
Examples of different instrumental setup´s		💾	EXAMPLES.dsk
several recorded sound for demonstration purpose		💾	DEMOSNOTES.dsk
Advanced Soundediting Program		💾	SUPERPLUS.dsk
Special Handling of Soundgeneration and Waveform editing		💾	PTWAVEFORMS.dsk
Multichannel Soundeditor		💾	METATRAK.dsk
Multichannel Configurationfiles		💾	METAFILES.dsk
Only for use with later alpha syntaurisystem with ALF Soundcard NOT FOR USE with Mountain Computer Music System !		💾	SYNTAURI3.dsk
Manuals and REFs			
Synth Lab - User Manual		PDF	synthlab_usersmanual.pdf
Syntauri Metatrak - User Manual		PDF	Syntauri METATRAK - User's Manual.pdf
Syntauri Metatrak - Quick Ref		PDF	syntauri-metatrak-quickref.pdf
Syntauri Sounds Trio		PDF	syntauri-sounds-trio.pdf
Alpha Plus - Manual	Only for use with later alpha syntaurisystem with ALF Soundcard NOT FOR USE with Mountain Computer Music System !	PDF	syntauri-alphaplus.pdf
Alpha Plus - Quick Ref	Only for use with later alpha syntaurisystem with ALF Soundcard NOT FOR USE with Mountain Computer Music System !	PDF	syntauri_alphaplus_quick_reference_chart.pdf
Circuit Schematics			
Circuitplan from Alpha Syntauri Interfacecard	(old version with DB25) low Res pictures as .jpg		AS_InterfacecardFinalReleaseAllDetectedCircuitplan.jpg
Circuitplan from Alpha Syntauri Interfacecard	Hires .PDF File	PDF	circuitplan new final.pdf
Circuitplan from Alpha Syntauri Keyboard	low Res pictures as .jpg		ASkeyboardSwitchPCBcircuitplan.jpg
Circuitplan from Alpha Syntauri Keyboard	Hires .PDF File	PDF	Circuitplan ASinternPianokeyswitches.pdf
Circuitplan from Alpha Syntauri internal Decoder	low Res pictures as .jpg		ASinternKeyboardDecoderCircuitplan.jpg
Circuitplan from Alpha Syntauri internal Decoder	Hires .PDF File	PDF	Circuitplan ASinternDecoder.pdf
TECH Documents of the alpha syntauri system including datasheets and schematics			AS_TECH_DOCS.PDF
		PDF	

Mountain Computer Music System:			
Startup Disk with Baseprograms: Player, Editor,Merger		💾	MusicSystemDisk1SideA.dsk
Sample Songs		💾	MusicSystemDisk1SideB.dsk
Instrument Definer, Player		💾	MusicSystem Disk2SideA.dsk
Instrument collection		💾	MusicSystemDisk2Sid B.dsk
Mountain Computer Music System **Operation Manual (81 MB)**		PDF	MountainComputerMusicSystem OperatingManual.pdf
Mountain Computer Music System **Frontcard circuit schematics**	**low Res picture as . jpg file**		CircuitplanFrontcardCard1.jpg
Mountain Computer Music System **Frontcard circuit schematics**	**Hires PDF-File**	PDF	MCMS Card1.pdf
Mountain Computer Music System **Rearcard circuit schematics**	**low Res picture as .jpg file**		MCMScard2Circuitplan.jpg
Mountain Computer Music System **Frontcard circuit schematics**	**Hires PDF-File**	PDF	MCMS Circuitplan Card 2.pdf
		PDF	
AM6080 chip datasheet	PDF		AM6080 datasheet.pdf
NE5008 chip datasheet	PDF		NE5008 datasheet.pdf
LF351/LF353 Datasheet	PDF		LF353 datasheet.pdf

<= back to previous page **continue to next page =>**

....

....

◄ **turn back to the indexpage** ⟵

due to european laws and german court decision:
I hereby declare no responsibility to any "deep links" resulting from the links in this page. I have no influence to the pages linked hereby in this page and the contents in those pages. I therefor can´t take any kind of responsibility to contents in the pages, where these links direct the readers browser to nor to the contents resulting from following up links from those pages. The reference to contents by this links is dependent ro the status of the date when the links have been set (April 2013) and it might occur that references and contents may change by the fact that domains may have been discontinued from their former owners. In such cases i can´t take any kind of responsibility to the changed contents. this is specialy valid to banners, advertisements or merchandising links in the targeted pages.

© **copyright: Harro Walsh 2013**

APPLEBOX

the alpha syntauri system
a review of the alpha syntauri system and a brief listing of softwareimages used at the Apple II and IIGS displaying the used sound/recording sources for search of diskimages and the related cards

Thankfully to Tom Arnold (from whom i recieved the missing pictures, i was hunting for - from the alpha syntauri interface card) , a contact i recieved from Mark Glinsky (a musician that also owned a alpha syntauri system and who also supported me by hunting missing pictures of the alpha syntauri system) i recieved the scans from an ancient magazin that contains a testing review of the alpha syntauri system:

Alpha Syntauri Pro 5 Music Synthesizer

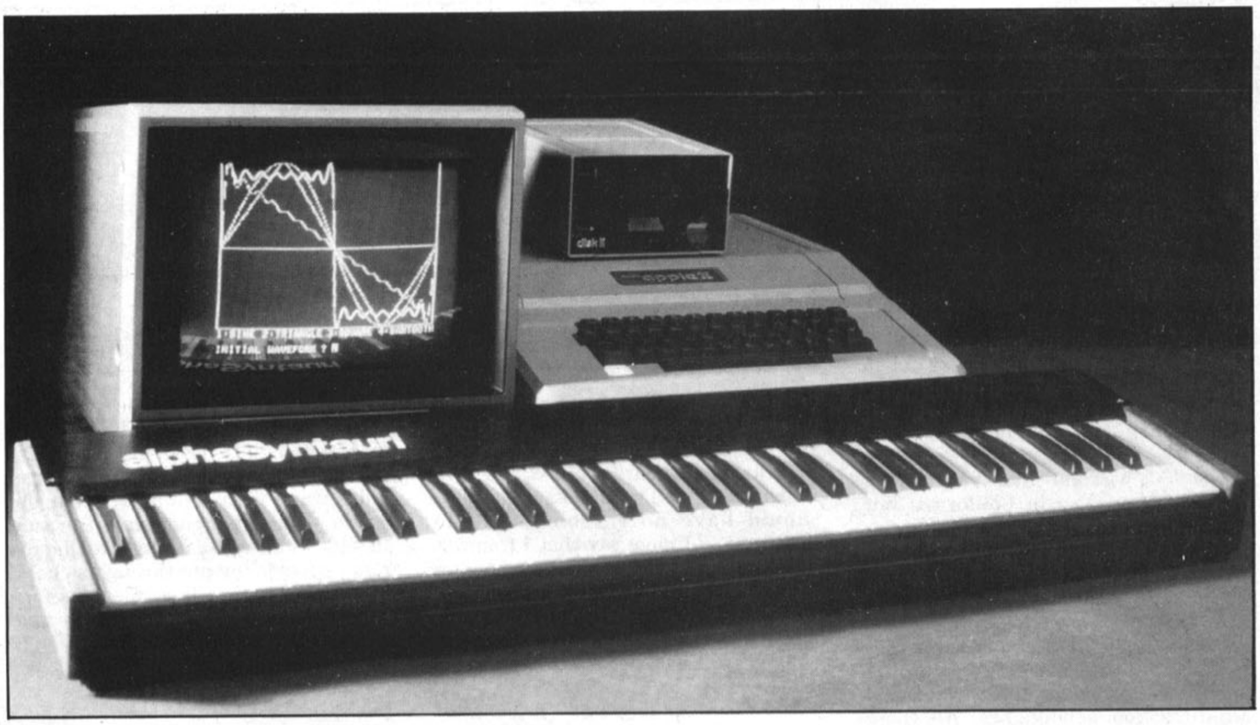

The stated concept of the Syntauri synthesizer is "to provide synthesizers which are fully programmable, modular, expandable, and affordable." The way Syntauri has gone about achieving this stated goal is to base their instruments primarily around software, rather than hardware in designing their modular setups. Modular means expandable, though, and as more and more programs are designed for the Syntauri, the owner *will* have to make some hardware purchases to obtain the full benefits from the instrument. The basic setup is as follows: Syntauri Corp. provides a 5-octave, 61-note velocity sensing keyboard, interface cable, interface card, foot pedals, some basic software (disks), and instructional manuals. What must be obtained separately is a 48K Apple II or Apple II Plus computer, language card, at least one disk drive, a video monitor or color TV, an amplifier, and speaker(s) of some sort.

Standard features on the Syntauri Pro 5, which is the model we obtained for review (these are also standard on the alphaSyntauri Plus 4) include an 8 voice polyphonic synthesizer with two independent oscillators per voice, 32kHz sample rate, and 16 digital oscillators. There are foot pedals included for sustain and portamento, a 200 note sequencer, which can be auto-sequenced during playback, and storage facility for up to 20,000 notes per floppy disk.

Programmable features include two ADSR-type amplitude envelopes for each voice, with one envelope per wave form. There is facility for up to 20 banks of preset storage per disk, and individual waveforms and envelopes may also be saved. Vibrato is user-controllable for both rate and depth, and velocity-sensitivity on the keyboard is also user-definable. Standard effects include tremolo, chorus, pitch bend and pitch sweep.

We gave the complete alphaSyntauri Pro 5 to Ed Walsh, a session musician who has appeared on virtually hundreds of albums and jingles, and who is a recognized expert in the practical and commercial uses of computerized digital synthesizer technology. His report follows:

When you first power up the alphaSyntauri, it loads in Alpha Plus, which is the same language base you use with a standard Apple computer. The Syntauri then asks you to set some parameters, such as overall volume; a certain group of 10 presets (activated by the numerical keys 1 through 0) — it also turns on the various voice cards and interger card. Once you have let the computer know that all is done correctly, it then loads the information interger basic, etc. This sounds very lengthy, but all these things are accomplished in a relatively short period of time.

Now, on the screen before you, you have your first preset sound. As you play the keyboard, the notes you are playing appear on the screen in small rectangular shapes. Each octave takes up one horizontal line, the lowest octave being on the bottom, the highest on top. With a color monitor (necessary), each note is indicated by a different color. Towards the bottom of the screen are a number of preset parameters which you can modify. These are 10 musical instrument names — only one is active at a time. In the lower right hand corner of the

▶ 75

Scanned by T.Arnold

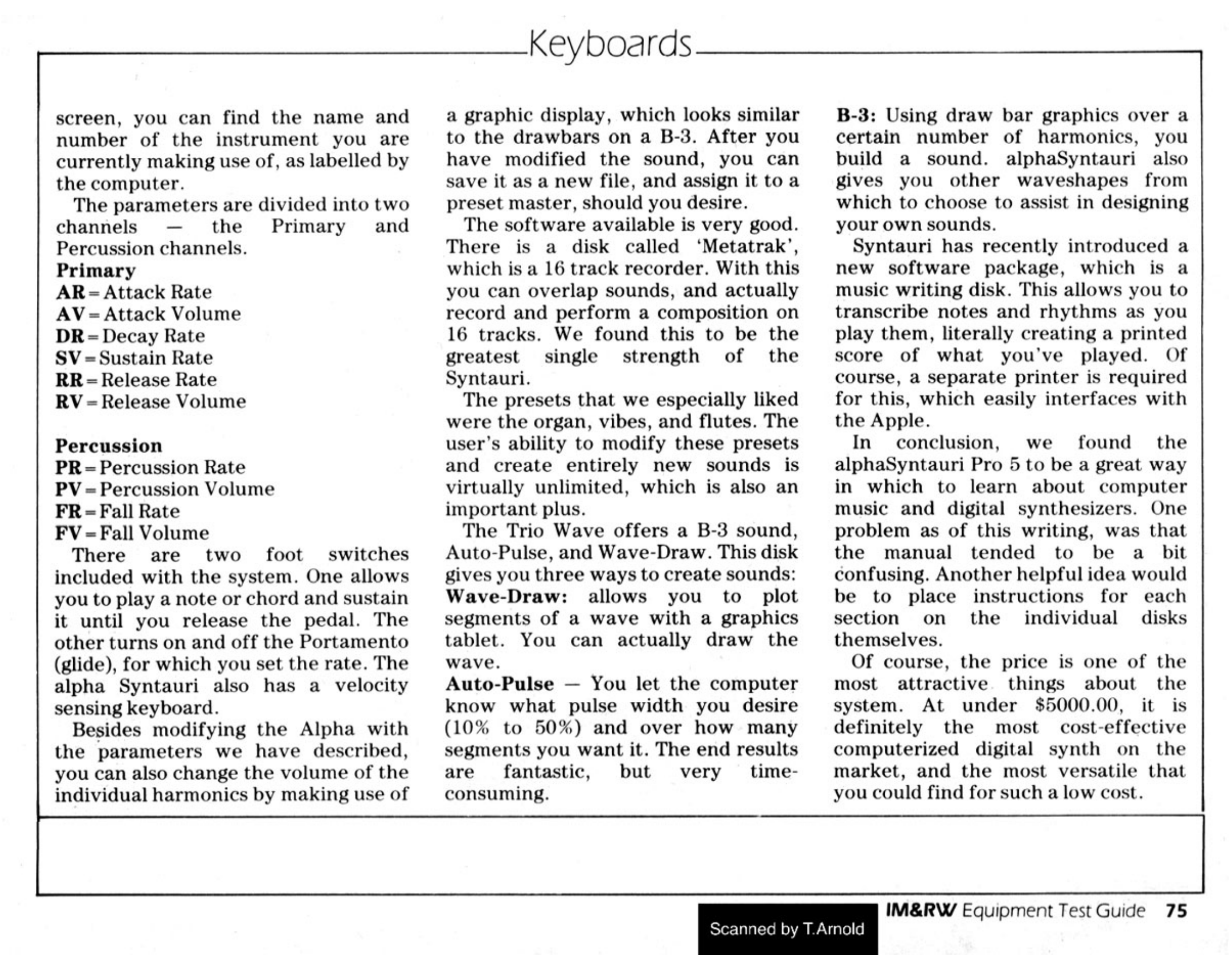

screen, you can find the name and number of the instrument you are currently making use of, as labelled by the computer.

The parameters are divided into two channels — the Primary and Percussion channels.

Primary

AR = Attack Rate
AV = Attack Volume
DR = Decay Rate
SV = Sustain Rate
RR = Release Rate
RV = Release Volume

Percussion

PR = Percussion Rate
PV = Percussion Volume
FR = Fall Rate
FV = Fall Volume

There are two foot switches included with the system. One allows you to play a note or chord and sustain it until you release the pedal. The other turns on and off the Portamento (glide), for which you set the rate. The alpha Syntauri also has a velocity sensing keyboard.

Besides modifying the Alpha with the parameters we have described, you can also change the volume of the individual harmonics by making use of a graphic display, which looks similar to the drawbars on a B-3. After you have modified the sound, you can save it as a new file, and assign it to a preset master, should you desire.

The software available is very good. There is a disk called 'Metatrak', which is a 16 track recorder. With this you can overlap sounds, and actually record and perform a composition on 16 tracks. We found this to be the greatest single strength of the Syntauri.

The presets that we especially liked were the organ, vibes, and flutes. The user's ability to modify these presets and create entirely new sounds is virtually unlimited, which is also an important plus.

The Trio Wave offers a B-3 sound, Auto-Pulse, and Wave-Draw. This disk gives you three ways to create sounds:

Wave-Draw: allows you to plot segments of a wave with a graphics tablet. You can actually draw the wave.

Auto-Pulse — You let the computer know what pulse width you desire (10% to 50%) and over how many segments you want it. The end results are fantastic, but very time-consuming.

B-3: Using draw bar graphics over a certain number of harmonics, you build a sound. alphaSyntauri also gives you other waveshapes from which to choose to assist in designing your own sounds.

Syntauri has recently introduced a new software package, which is a music writing disk. This allows you to transcribe notes and rhythms as you play them, literally creating a printed score of what you've played. Of course, a separate printer is required for this, which easily interfaces with the Apple.

In conclusion, we found the alphaSyntauri Pro 5 to be a great way in which to learn about computer music and digital synthesizers. One problem as of this writing, was that the manual tended to be a bit confusing. Another helpful idea would be to place instructions for each section on the individual disks themselves.

Of course, the price is one of the most attractive things about the system. At under $5000.00, it is definitely the most cost-effective computerized digital synth on the market, and the most versatile that you could find for such a low cost.

Scanned by T.Arnold

And while hunting for the information related to the alpha syntauri system and designing a multifuncional sound and speech card i collected various diskimages from the internet and created a table that displays which kind off software image will request which kind of hardware. So this table might become valuable to those who have a piece of MIDI- or Soundcard for the Apple II series (including the software that supports the IIGS internal soundchip) and who are searching for software that will support that hardware:

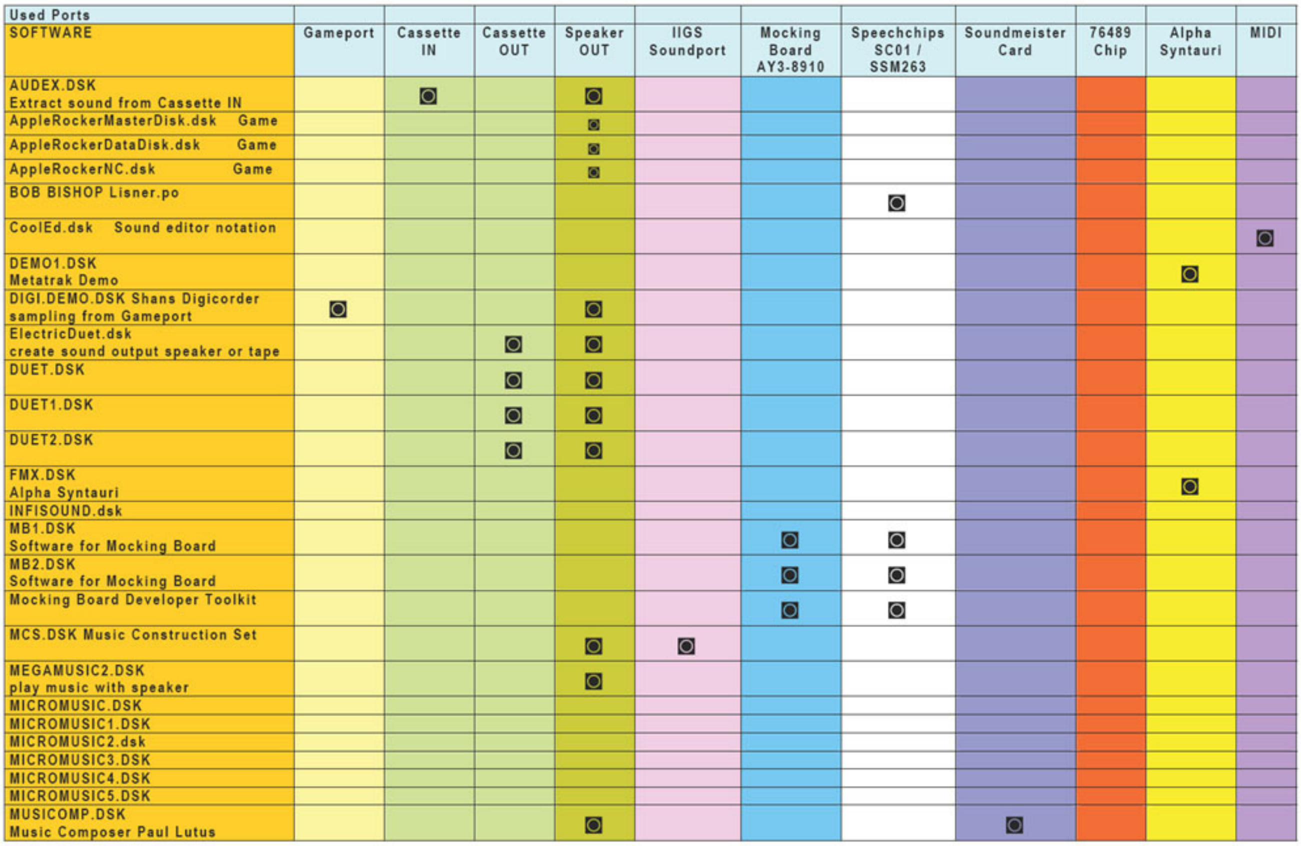

Used Ports SOFTWARE	Gameport	Cassette IN	Cassette OUT	Speaker OUT	IIGS Soundport	Mocking Board AY3-8910	Speechchips SC01 / SSM263	Soundmeister Card	76489 Chip	Alpha Syntauri	MIDI
AUDEX.DSK Extract sound from Cassette IN		●		●							
AppleRockerMasterDisk.dsk Game				●							
AppleRockerDataDisk.dsk Game				●							
AppleRockerNC.dsk Game				●							
BOB BISHOP Lisner.po							●				
CoolEd.dsk Sound editor notation											●
DEMO1.DSK Metatrak Demo										●	
DIGI.DEMO.DSK Shans Digicorder sampling from Gameport	●			●							
ElectricDuet.dsk create sound output speaker or tape			●	●							
DUET.DSK			●	●							
DUET1.DSK			●	●							
DUET2.DSK			●	●							
FMX.DSK Alpha Syntauri										●	
INFISOUND.dsk											
MB1.DSK Software for Mocking Board						●	●				
MB2.DSK Software for Mocking Board						●	●				
Mocking Board Developer Toolkit						●	●				
MCS.DSK Music Construction Set				●	●						
MEGAMUSIC2.DSK play music with speaker				●							
MICROMUSIC.DSK											
MICROMUSIC1.DSK											
MICROMUSIC2.dsk											
MICROMUSIC3.DSK											
MICROMUSIC4.DSK											
MICROMUSIC5.DSK											
MUSICOMP.DSK Music Composer Paul Lutus				●				●			

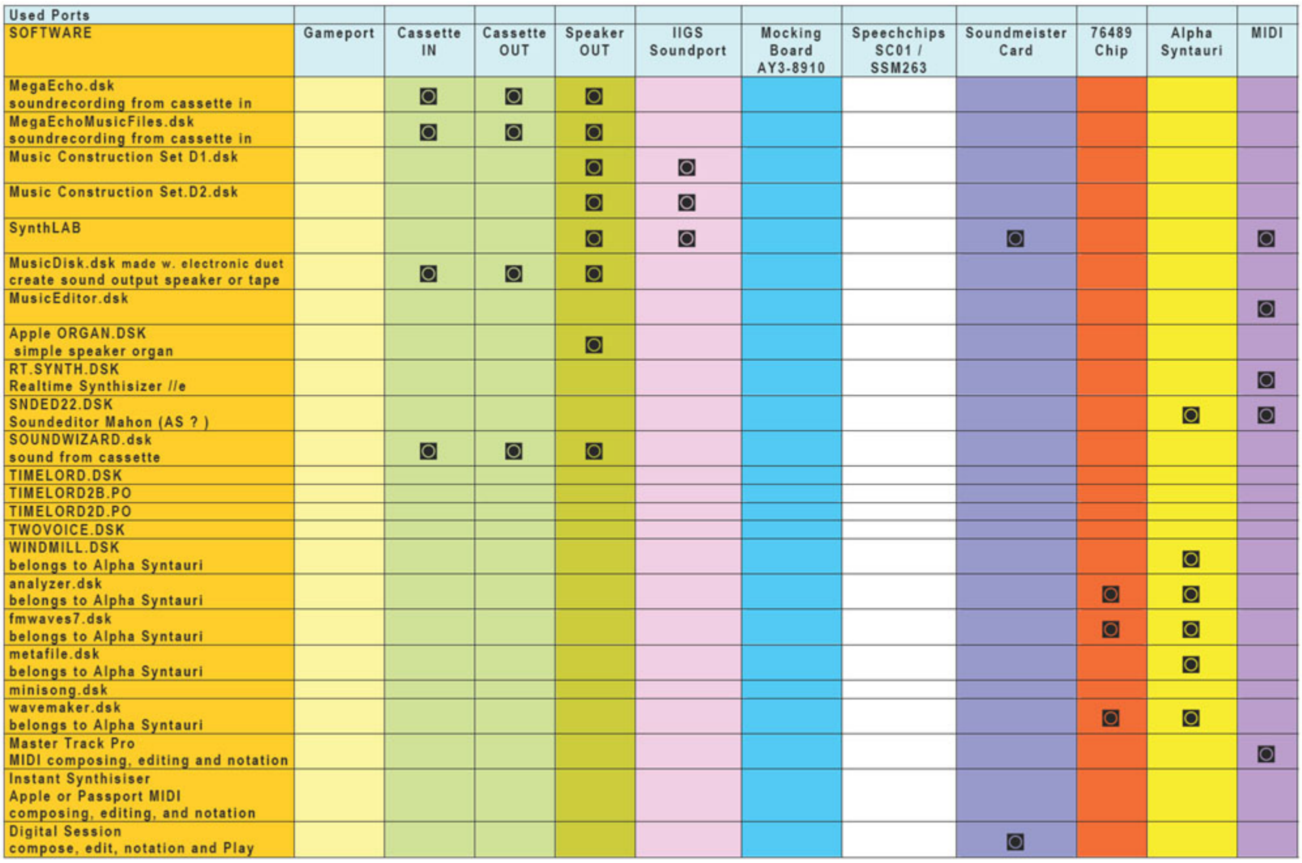

Used Ports											
SOFTWARE	Gameport	Cassette IN	Cassette OUT	Speaker OUT	IIGS Soundport	Mocking Board AY3-8910	Speechchips SC01 / SSM263	Soundmeister Card	76489 Chip	Alpha Syntauri	MIDI
MegaEcho.dsk soundrecording from cassette in		●	●	●							
MegaEchoMusicFiles.dsk soundrecording from cassette in		●	●	●							
Music Construction Set D1.dsk				●	●						
Music Construction Set.D2.dsk				●	●						
SynthLAB				●	●			●			●
MusicDisk.dsk made w. electronic duet create sound output speaker or tape		●	●	●							
MusicEditor.dsk											●
Apple ORGAN.DSK simple speaker organ				●							
RT.SYNTH.DSK Realtime Synthisizer //e											●
SNDED22.DSK Soundeditor Mahon (AS ?)										●	●
SOUNDWIZARD.dsk sound from cassette		●	●	●							
TIMELORD.DSK											
TIMELORD2B.PO											
TIMELORD2D.PO											
TWOVOICE.DSK											
WINDMILL.DSK belongs to Alpha Syntauri										●	
analyzer.dsk belongs to Alpha Syntauri									●	●	
fmwaves7.dsk belongs to Alpha Syntauri									●	●	
metafile.dsk belongs to Alpha Syntauri										●	
minisong.dsk											
wavemaker.dsk belongs to Alpha Syntauri									●	●	
Master Track Pro MIDI composing, editing and notation											●
Instant Synthisiser Apple or Passport MIDI composing, editing, and notation											
Digital Session compose, edit, notation and Play								●			

in a few weeks this list will be extended with a bunch of other software listed ....

<= back to previous page	go ahead to next page =>

....

....

◄ turn back to the indexpage ⟵

due to european laws and german court decision:
I hereby declare no responsibility to any "deep links" resulting from the links in this page. I have no influence to the pages linked hereby in this page and the contents in those pages. I therefor can´t take any kind of responsibility to contents in the pages, where these links direct the readers browser to nor to the contents resulting from following up links from those pages. The reference to contents by this links is dependent ro the status of the date when the links have been set (April 2013) and it might occur that references and contents may change by the fact that domains may have been discontinued from their former owners. In such cases i can´t take any kind of responsibility to the changed contents. this is specialy valid to banners, advertisements or merchandising links in the targeted pages.

© copyright: Harro Walsh 2013

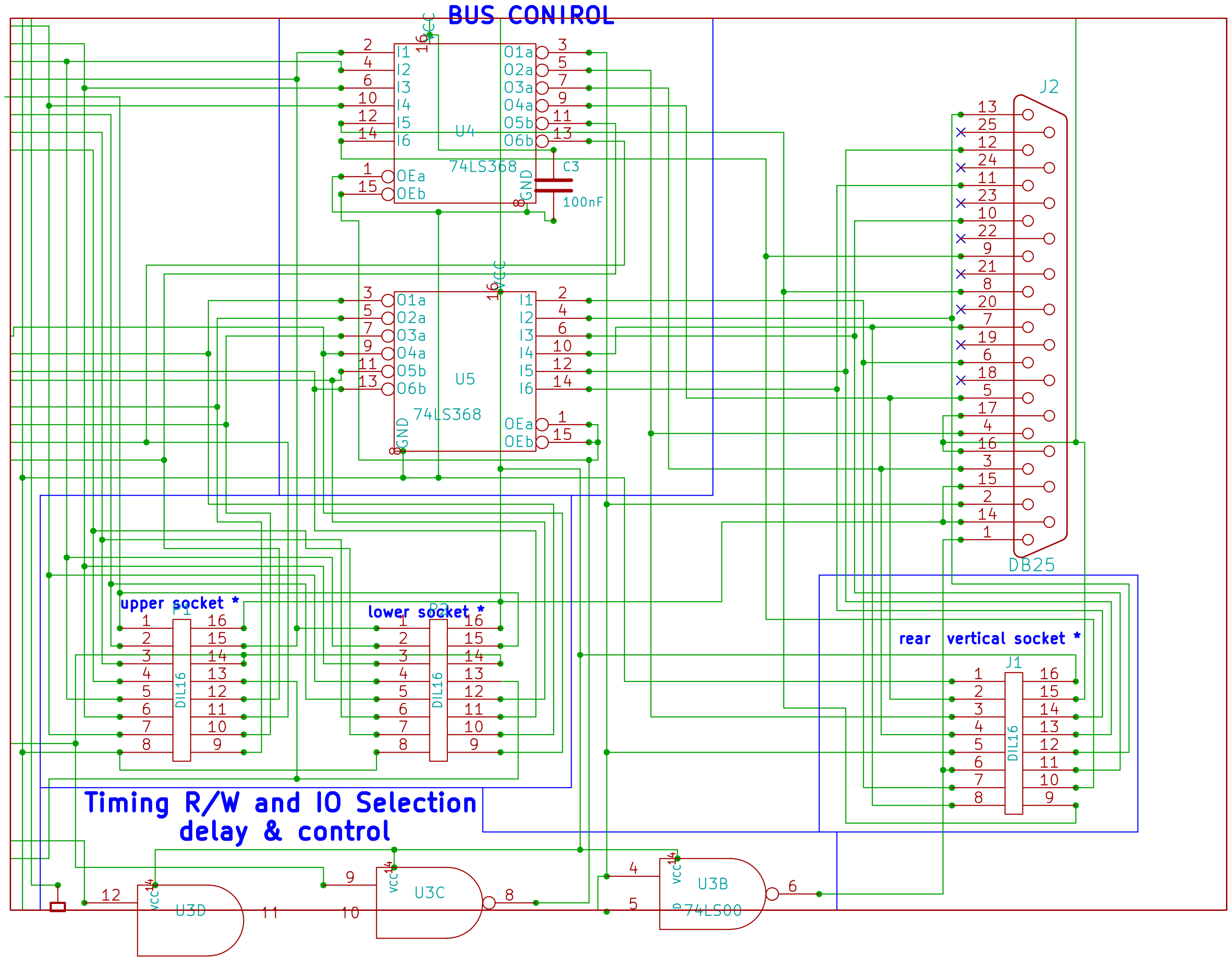
BUS CONIROL
U4
74LS368
U5
74LS368
I1
I2
I3
I4
I5
I6
O1a
O2a
O3a
O4a
O5b
O6b
OEa
OEb
VCC
GND
C3
100nF
J2
DB25
Timing R/W and IO Selection
delay & control
upper socket *
P1
lower socket *
P2
DIL16
rear vertical socket *
J1
U3D
U3C
U3B
74LS00
vcc

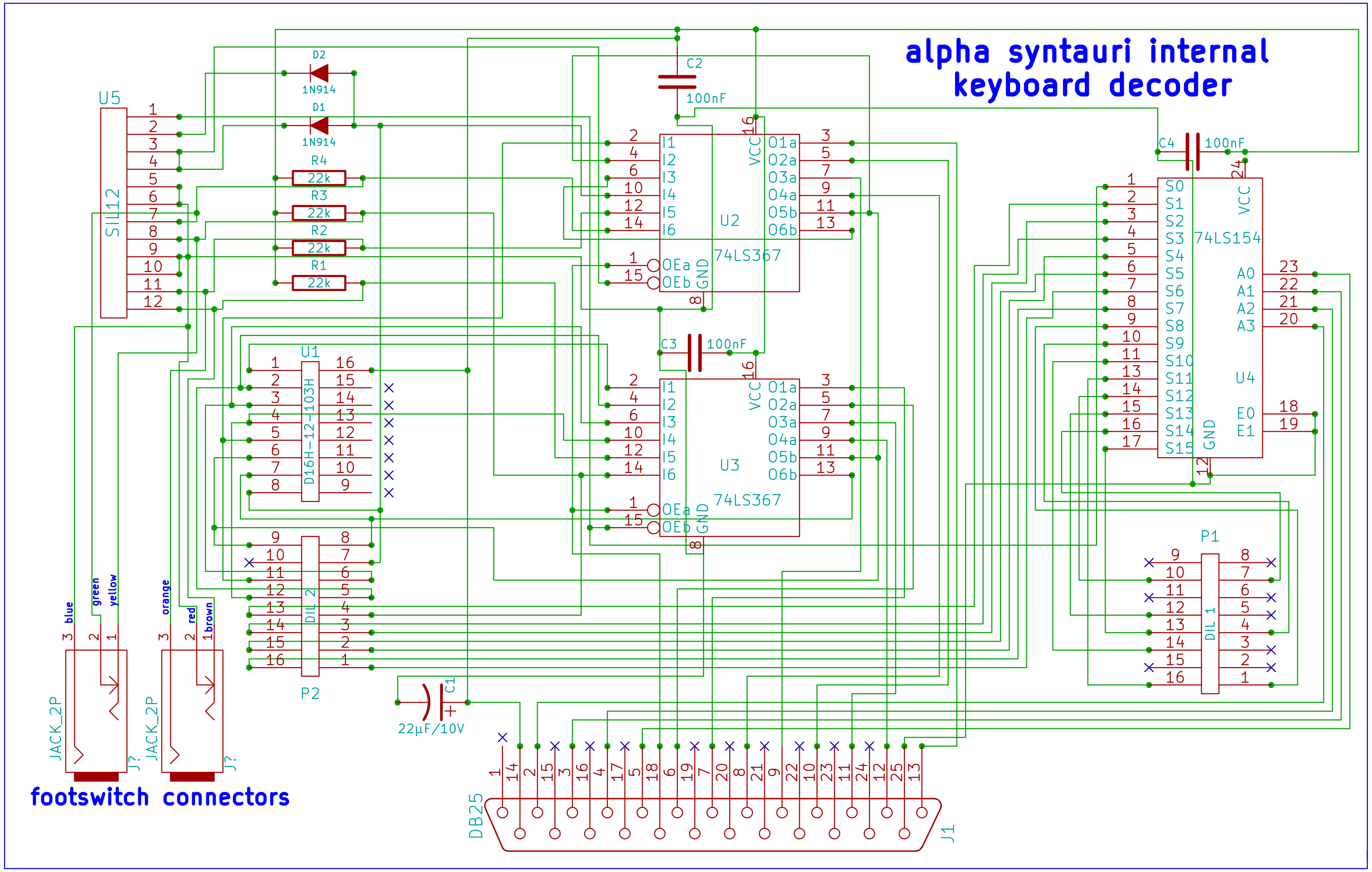
alpha syntauri internal
keyboard decoder
footswitch connectors
U5
SIL12
D2
D1
1N914
R4
R3
R2
R1
22k
C2
C3
C4
100nF
C1
22µF/10V
U1
D16H-12-103H
P2
DIL 2
U2
U3
74LS367
I1
I2
I3
I4
I5
I6
O1a
O2a
O3a
O4a
O5b
O6b
OEa
OEb
VCC
GND
U4
74LS154
S0
S1
S2
S3
S4
S5
S6
S7
S8
S9
S10
S11
S12
S13
S14
S15
A0
A1
A2
A3
E0
E1
P1
DIL 1
J?
JACK_2P
blue
green
yellow
orange
red
brown
DB25
J1

File: ASinternDecoder.sch
Sheet: /
Title:
Size: A4 Date: 18 feb 2014 **Rev:**
KiCad E.D.A. eeschema (2012-01-19 BZR 3256)-stable Id: 1/1

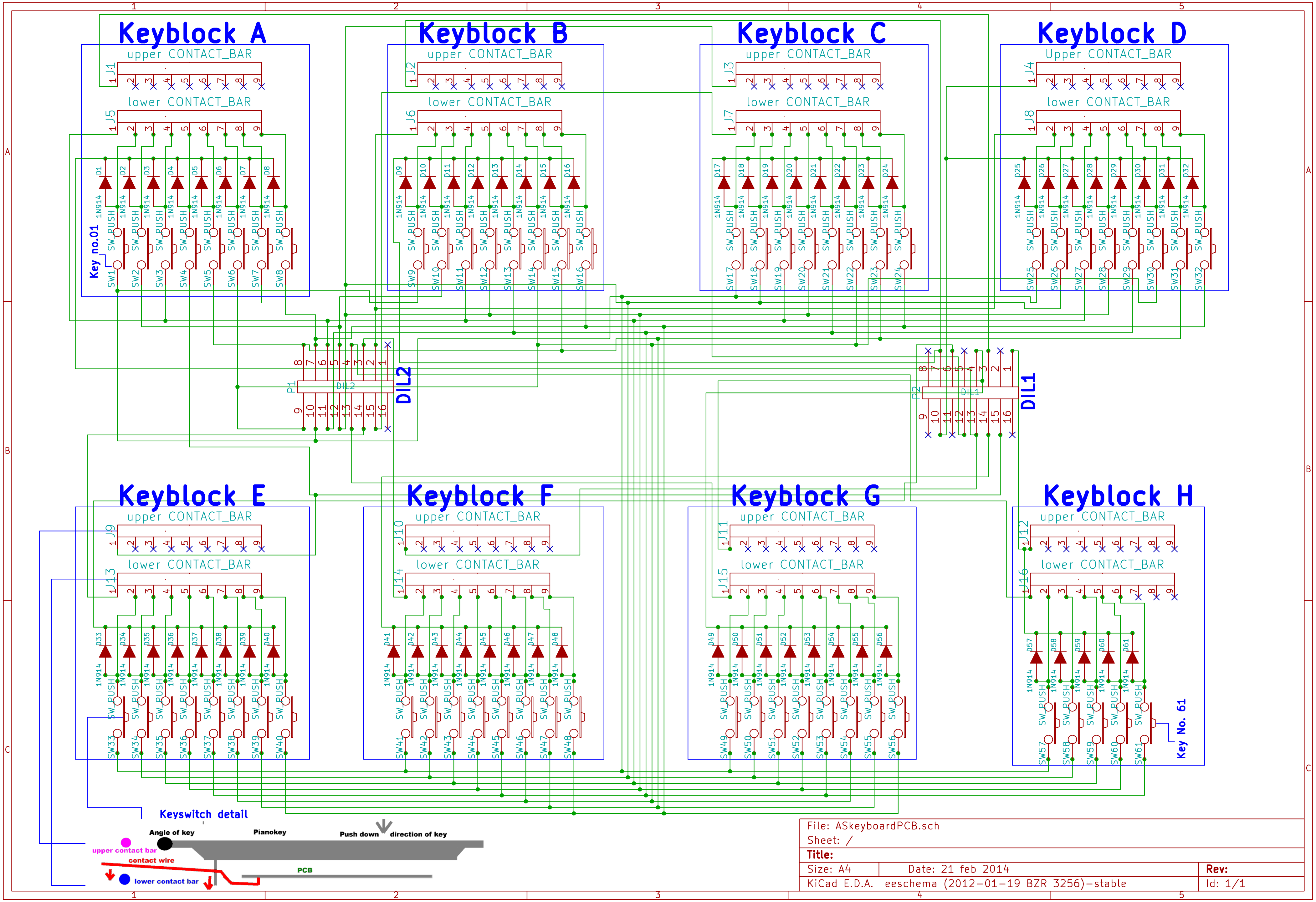
Keyblock A
Keyblock B
Keyblock C
Keyblock D
Keyblock E
Keyblock F
Keyblock G
Keyblock H
upper CONTACT_BAR
Upper CONTACT_BAR
lower CONTACT_BAR
J1
J2
J3
J4
J5
J6
J7
J8
J9
J10
J11
J12
J13
J14
J15
J16
1N914
SW_PUSH
Key no.01
Key No. 61
DIL1
DIL2
P1
P2
Keyswitch detail
Angle of key
Pianokey
Push down
direction of key
upper contact bar
contact wire
lower contact bar
PCB
File: ASkeyboardPCB.sch
Sheet: /
Title:
Size: A4
Date: 21 feb 2014
Rev:
KiCad E.D.A. eeschema (2012-01-19 BZR 3256)-stable
Id: 1/1

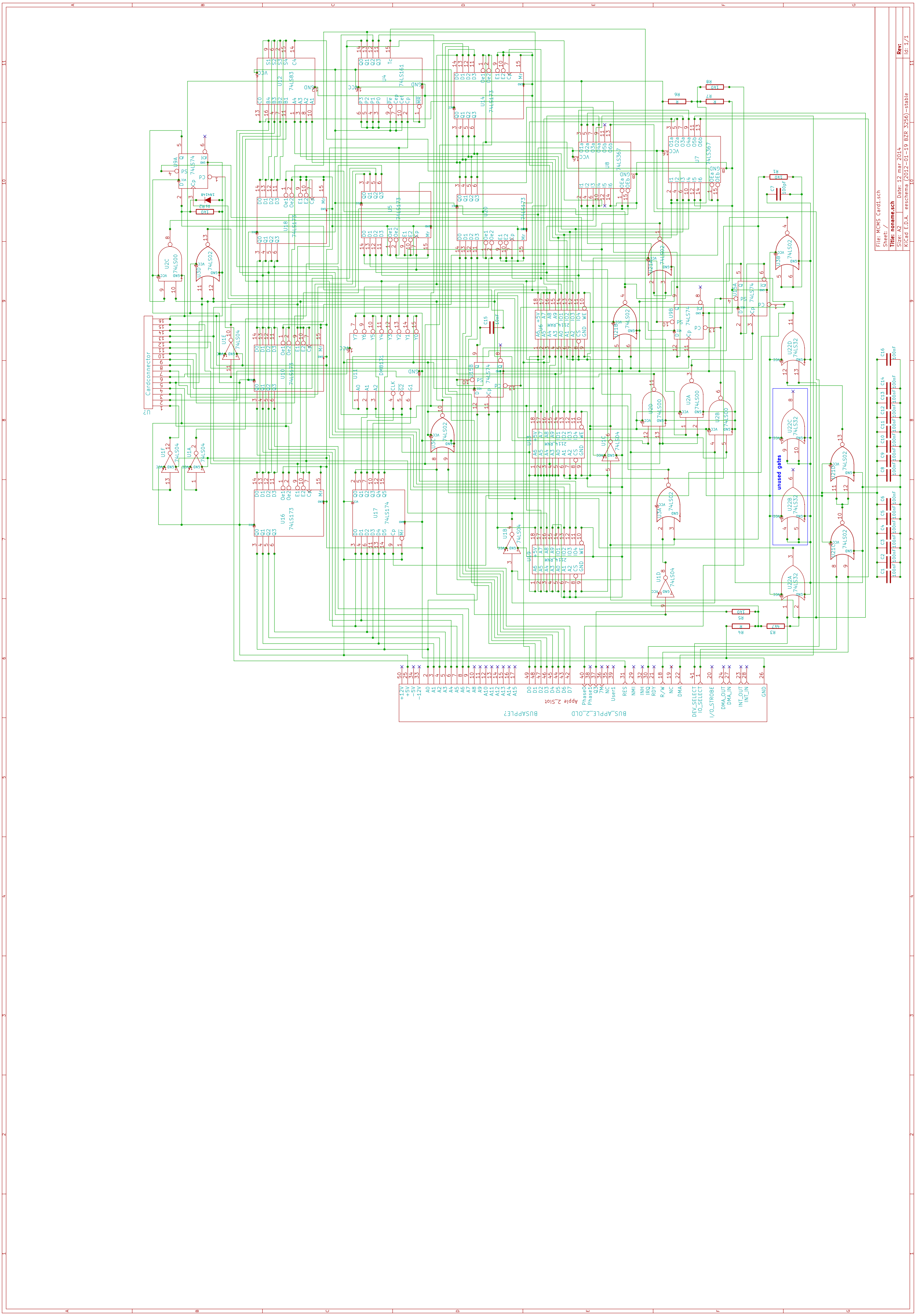
File: MCMS Card1.sch
Sheet: /
Title: noname.sch
Size: A2
Date: 12 mar 2014
KiCad E.D.A. eeschema (2012-01-19 BZR 3256)-stable
Rev:
Id: 1/1
U12 74LS83
U4 74LS161
U14 74LS173
U8 74LS367
U7 74LS367
U9A 74LS74
1N4148
U18 74LS173
U5 74LS173
U20 74LS173
U2C 74LS00
U3D 74LS02
U10 74LS173
U11 DM8131
U1E 74LS04
U15B 74LS74
C15
10nF
2111 RAM
U21B 74LS02
U9B 74LS74
U15A 74LS74
U3B 74LS02
U22D 74LS32
U1F 74LS04
U1A 74LS04
U3C 74LS02
U1C 74LS04
U2D 74LS00
U2A 74LS00
U2B 74LS00
U22C 74LS32
U21D 74LS02
U16 74LS173
U17 74LS174
U1B 74LS04
U3A 74LS02
U22B 74LS32
U21C 74LS02
U1D 74LS04
U22A 74LS32
unused gates
Cardconnector
R6
R8
R7
R1
C7
100pF
R5
R4
R3
C16
C14
C13
C12
C11
C10
C9
C8
C6
C5
C4
C3
C2
C1
100nF
BUSAPPLE2
BUS_APPLE_2_OLD
Apple 2_Slot
+12V
+5V
-5V
-12V
A0
A1
A2
A3
A4
A5
A6
A7
A8
A9
A10
A11
A12
A13
A14
A15
D0
D1
D2
D3
D4
D5
D6
D7
Phase0
Phase1
Q3
7M
NC
User1
RES
NMI
INH
IRQ
RDY
R/W
NC
DMA
DEV_SELECT
IO_SELECT
I/O_STROBE
DMA_OUT
DMA_IN
INT_OUT
INT_IN
GND

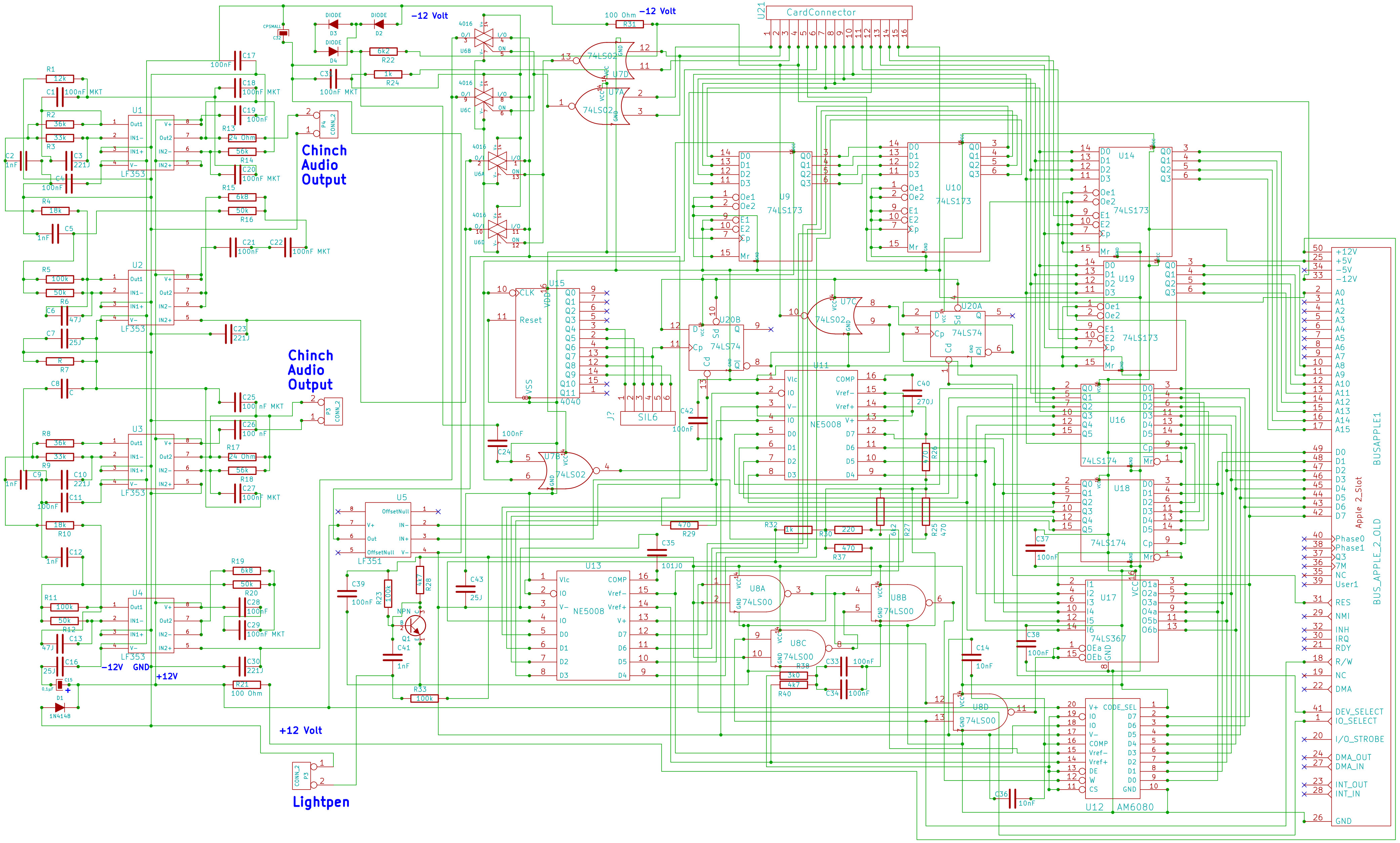
CardConnector
U21
BUSAPPLE1
BUS_APPLE_2_OLD
Apple 2_Slot
+12V
+5V
-5V
-12V
A0
A1
A2
A3
A4
A5
A6
A7
A8
A9
A10
A11
A12
A13
A14
A15
D0
D1
D2
D3
D4
D5
D6
D7
Phase0
Phase1
Q3
7M
NC
User1
RES
NMI
INH
IRQ
RDY
R/W
NC
DMA
DEV_SELECT
IO_SELECT
I/O_STROBE
DMA_OUT
DMA_IN
INT_OUT
INT_IN
GND
Chinch Audio Output
Chinch Audio Output
Lightpen
-12 Volt
-12 Volt
+12 Volt
-12V
GND
+12V
100 Ohm
U1 LF353
U2 LF353
U3 LF353
U4 LF353
U5 LF351
U6A 4016
U6B 4016
U6C 4016
U6D 4016
U7A 74LS02
U7B 74LS02
U7C 74LS02
U7D 74LS02
U8A 74LS00
U8B 74LS00
U8C 74LS00
U8D 74LS00
U9 74LS173
U10 74LS173
U14 74LS173
U19 74LS173
U11 NE5008
U13 NE5008
U12 AM6080
U15 4040
U16 74LS174
U18 74LS174
U17 74LS367
U20A 74LS74
U20B 74LS74
J? SIL6
P3 CONN_2
P4 CONN_2
Q1 NPN
D1 1N4148
D2 DIODE
D3 DIODE
D4 DIODE
C32 CPSMALL
R1 12k
R2 36k
R3 33k
R4 18k
R5 100k
R6 50k
R7 R
R8 36k
R9 33k
R10 18k
R11 100k
R12 50k
R13 24 Ohm
R14 56k
R15 6k8
R16 50k
R17 24 Ohm
R18 56k
R19 6k8
R20 50k
R21 100 Ohm
R22 6k2
R23 100k
R24 1k
R25 470
R26 470
R27 6k2
R28 4k7
R29 470
R30 220
R31 100 Ohm
R32 1k
R33 100k
R37 470
R38 3k0
R40 4k7
C1 100nF MKT
C2 1nF
C3 221J
C4 100nF
C5 1nF
C6 47J
C7 25J
C8 C
C9 1nF
C10 221J
C11 100nF
C12 1nF
C13 47J
C14 10nF
C15 0.1µF
C16 25J
C17 100nF
C18 100nF MKT
C19 100nF
C20 100nF MKT
C21 100nF
C22 100nF MKT
C23 221J
C24 100nF
C25 100 nF MKT
C26 100 nF
C27 100nF MKT
C28 100nF
C29 100nF MKT
C30 221J
C31 100nF MKT
C33 100nF
C34 100nF
C35 101J0
C36 10nF
C37 100nF
C38 100nF
C39 100nF
C40 270J
C41 1nF
C42 100nF
C43 25J

File: MCMS Card2.sch
Sheet: /
Title: noname.sch
Size: A3 Date: 17 mar 2014 **Rev:**
KiCad E.D.A. eeschema (2012-01-19 BZR 3256)-stable Id: 1/1

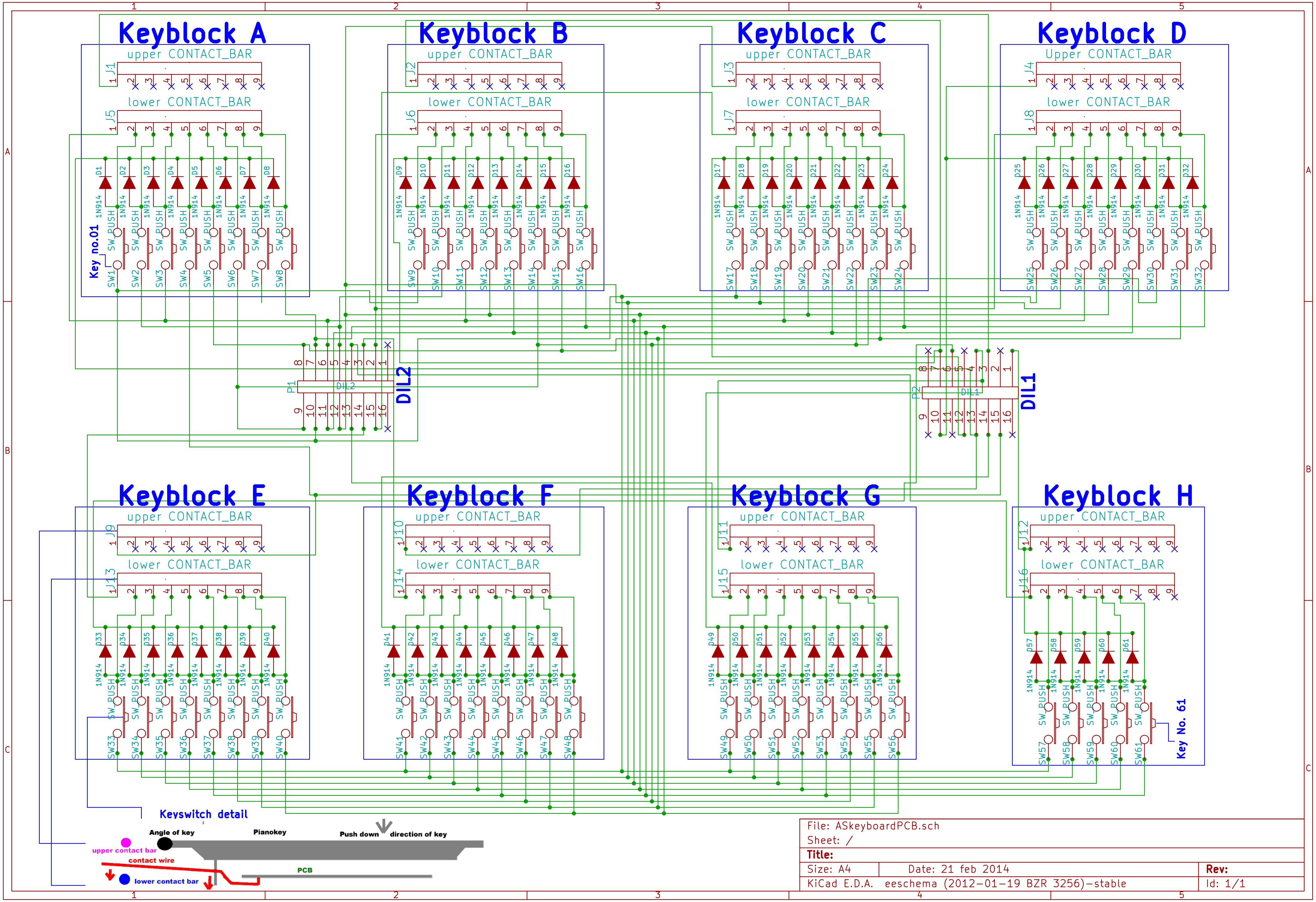
Keyblock A
Keyblock B
Keyblock C
Keyblock D
Keyblock E
Keyblock F
Keyblock G
Keyblock H
upper CONTACT_BAR
lower CONTACT_BAR
1N914
SW_PUSH
Key no.01
Key No. 61
DIL1
DIL2
P1
P2
Keyswitch detail
Angle of key
Pianokey
Push down
direction of key
upper contact bar
contact wire
PCB
lower contact bar

File: ASkeyboardPCB.sch
Sheet: /
Title:
Size: A4
Date: 21 feb 2014
Rev:
KiCad E.D.A. eeschema (2012-01-19 BZR 3256)-stable
Id: 1/1

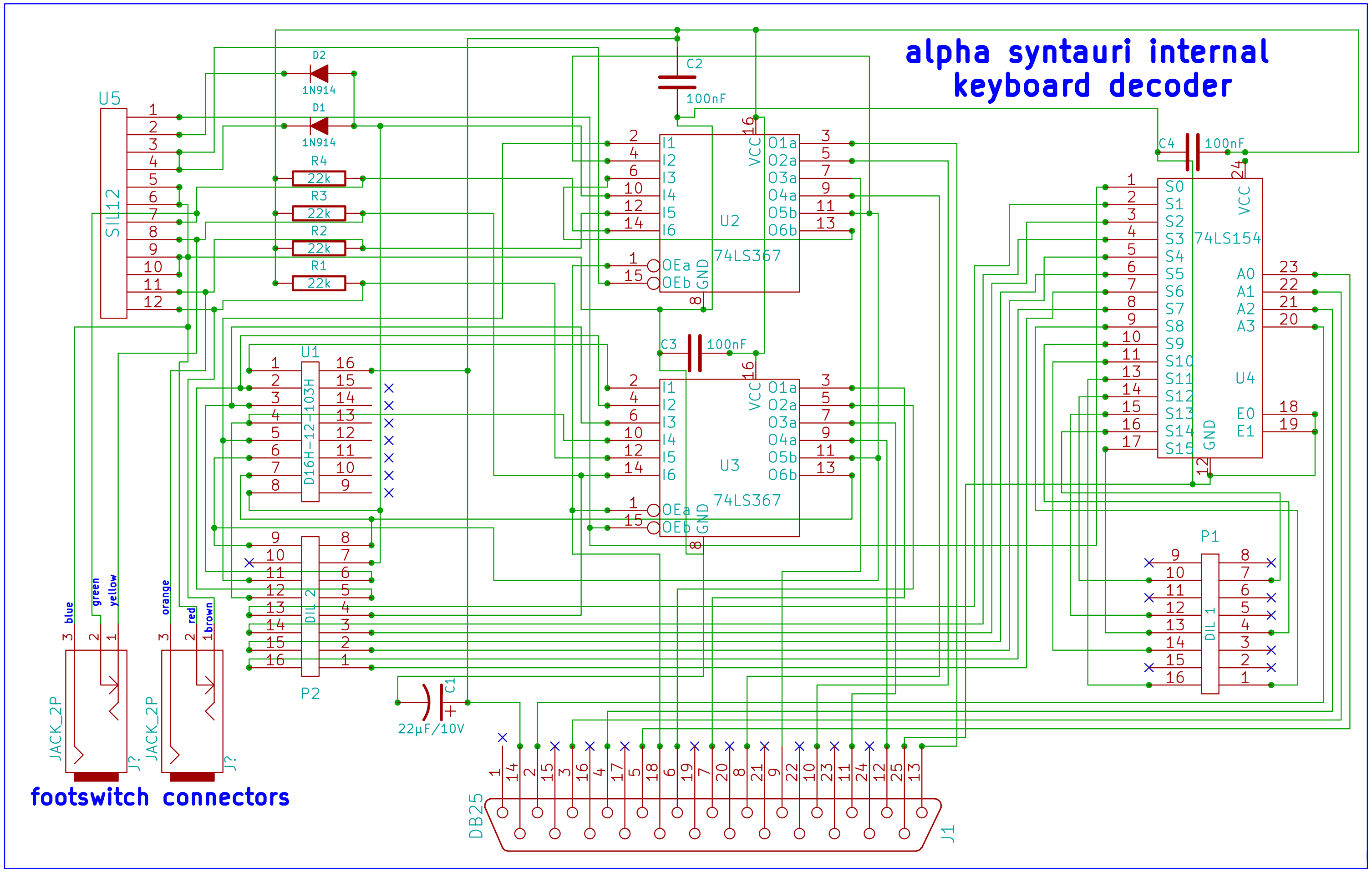
alpha syntauri internal
keyboard decoder
footswitch connectors
U4
74LS154
S0 S1 S2 S3 S4 S5 S6 S7 S8 S9 S10 S11 S12 S13 S14 S15
A0 A1 A2 A3
E0 E1
VCC
GND
C4
100nF
U2
74LS367
U3
74LS367
I1 I2 I3 I4 I5 I6
O1a O2a O3a O4a O5b O6b
OEa OEb
C2
100nF
C3
100nF
C1
22µF/10V
U1
D16H-12-103H
P1
DIL 1
P2
DIL 2
U5
SIL12
R1
R2
R3
R4
22k
D1
D2
1N914
J?
JACK_2P
brown
red
orange
yellow
green
blue
J1
DB25

File: ASinternDecoder.sch

Sheet: /

Title:

Size: A4 Date: 18 feb 2014 **Rev:**

KiCad E.D.A. eeschema (2012-01-19 BZR 3256)-stable Id: 1/1

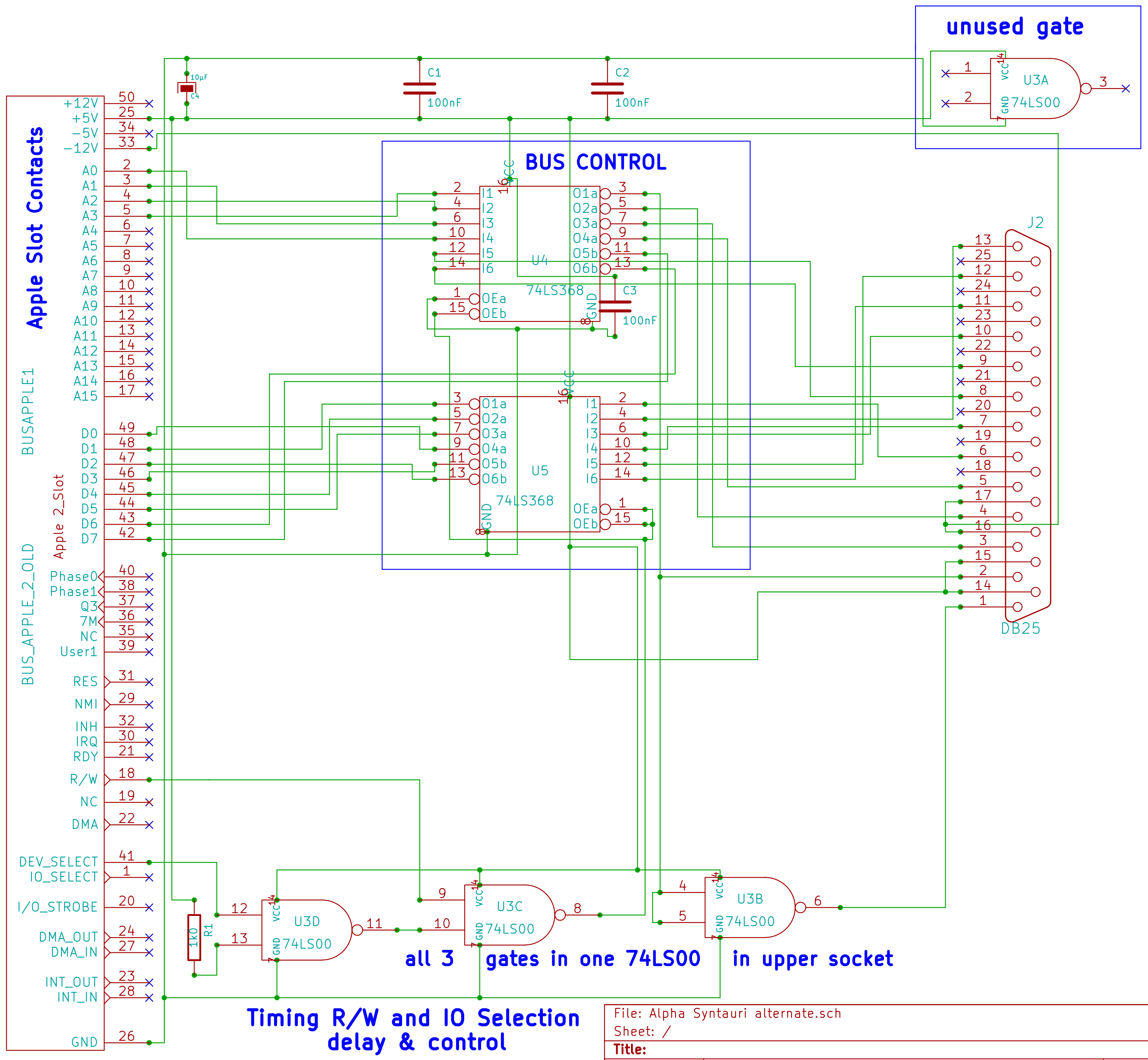
unused gate
U3A
74LS00
C1
100nF
C2
100nF
10µF
C4
Apple Slot Contacts
BUSAPPLE1
Apple 2_Slot
BUS_APPLE_2_OLD
+12V
+5V
-5V
-12V
A0
A1
A2
A3
A4
A5
A6
A7
A8
A9
A10
A11
A12
A13
A14
A15
D0
D1
D2
D3
D4
D5
D6
D7
Phase0
Phase1
Q3
7M
NC
User1
RES
NMI
INH
IRQ
RDY
R/W
NC
DMA
DEV_SELECT
IO_SELECT
I/O_STROBE
DMA_OUT
DMA_IN
INT_OUT
INT_IN
GND
BUS CONTROL
U4
74LS368
C3
100nF
U5
74LS368
J2
DB25
U3D
74LS00
U3C
74LS00
U3B
74LS00
R1
1k0
all 3 gates in one 74LS00 in upper socket
Timing R/W and IO Selection
delay & control

File: Alpha Syntauri alternate.sch
Sheet: /
Title:
Size: A4 Date: 15 apr 2014 **Rev:**
KiCad E.D.A. eeschema (2012-01-19 BZR 3256)-stable Id: 1/1

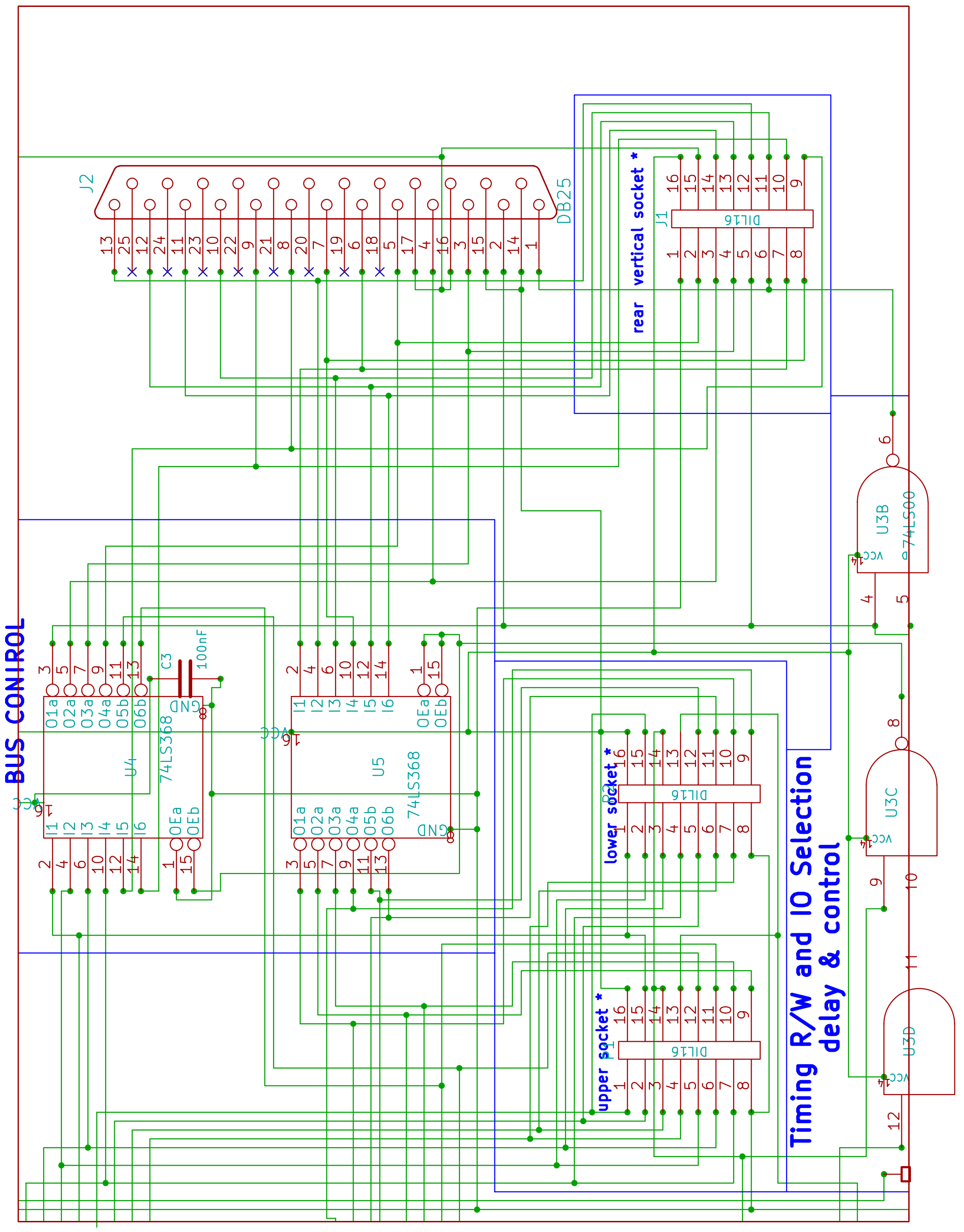
BUS CONTROL
Timing R/W and IO Selection
delay & control
J2
DB25
rear vertical socket *
J1
DIL16
lower socket *
P2
upper socket *
P1
U4
74LS368
U5
74LS368
C3
100nF
U3B
74LS00
U3C
U3D
VCC
GND

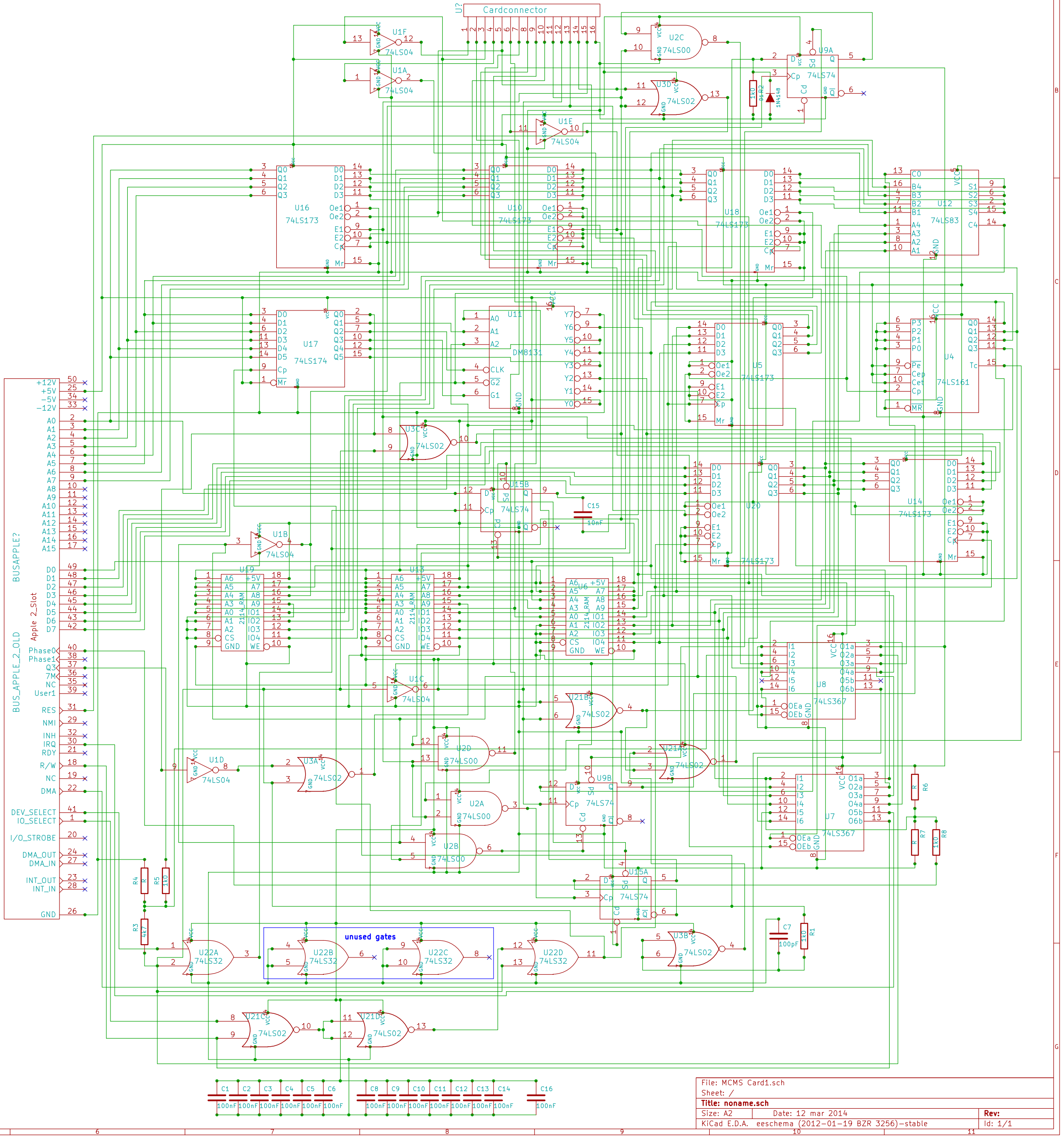
Cardconnector
U?
U1F 74LS04
U1A 74LS04
U1E 74LS04
U1B 74LS04
U1C 74LS04
U1D 74LS04
U2C 74LS00
U2D 74LS00
U2A 74LS00
U2B 74LS00
U3D 74LS02
U3C 74LS02
U3A 74LS02
U3B 74LS02
U9A 74LS74
U9B 74LS74
U15A 74LS74
U15B 74LS74
1N4148
10k
U16 74LS173
U10 74LS173
U18 74LS173
U5 74LS173
U20 74LS173
U14 74LS173
U12 74LS83
U17 74LS174
U11 DM8131
U4 74LS161
U19 2114_RAM
U13 2114_RAM
U6 2114_RAM
U8 74LS367
U7 74LS367
U21B 74LS02
U21A 74LS02
U21C 74LS02
U21D 74LS02
U22A 74LS32
U22B 74LS32
U22C 74LS32
U22D 74LS32
unused gates
C15 10nF
C7 100pF
R1 R3 R4 R5 R6 R7 R8
47k
C1 C2 C3 C4 C5 C6 C8 C9 C10 C11 C12 C13 C14 C16
100nF
BUSAPPLE?
BUS_APPLE_2_OLD
Apple 2_Slot
+12V
+5V
-5V
-12V
A0 A1 A2 A3 A4 A5 A6 A7 A8 A9 A10 A11 A12 A13 A14 A15
D0 D1 D2 D3 D4 D5 D6 D7
Phase0
Phase1
Q3
7M
NC
User1
RES
NMI
INH
IRQ
RDY
R/W
NC
DMA
DEV_SELECT
IO_SELECT
I/O_STROBE
DMA_OUT
DMA_IN
INT_OUT
INT_IN
GND

File: MCMS Card1.sch
Sheet: /
Title: noname.sch
Size: A2 Date: 12 mar 2014 **Rev:**
KiCad E.D.A. eeschema (2012-01-19 BZR 3256)-stable Id: 1/1

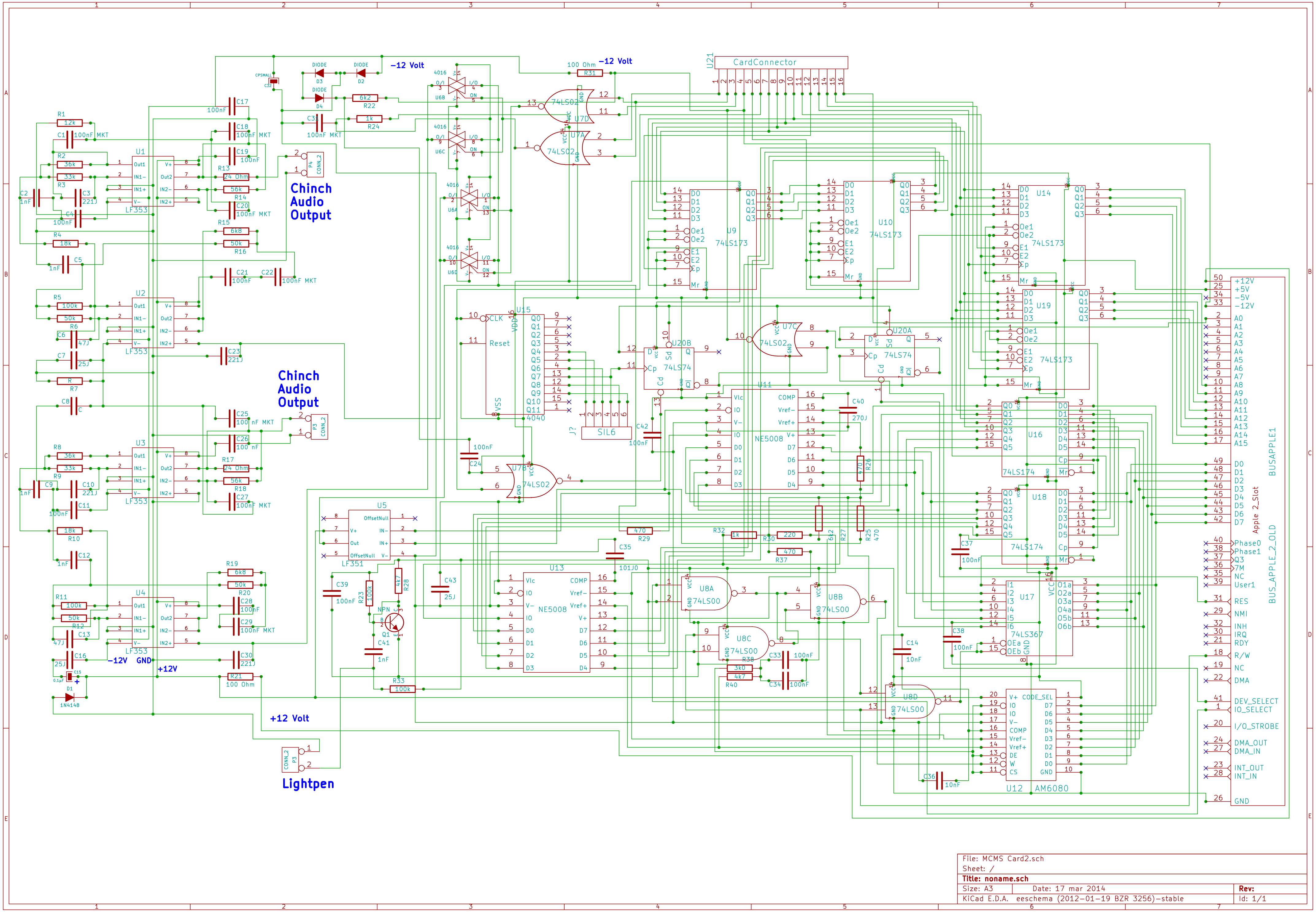
Chinch Audio Output
Chinch Audio Output
Lightpen
-12 Volt
-12 Volt
+12 Volt
-12V
GND
+12V
100 Ohm
CardConnector
U21
BUSAPPLE1
BUS_APPLE_2_OLD
Apple 2_Slot
+12V
+5V
-5V
-12V
A0
A1
A2
A3
A4
A5
A6
A7
A8
A9
A10
A11
A12
A13
A14
A15
D0
D1
D2
D3
D4
D5
D6
D7
Phase0
Phase1
Q3
7M
NC
User1
RES
NMI
INH
IRQ
RDY
R/W
NC
DMA
DEV_SELECT
IO_SELECT
I/O_STROBE
DMA_OUT
DMA_IN
INT_OUT
INT_IN
GND
U1 LF353
U2 LF353
U3 LF353
U4 LF353
U5 LF351
U6A 4016
U6B 4016
U6C 4016
U6D 4016
U7A 74LS02
U7B 74LS02
U7C 74LS02
U7D 74LS02
U8A 74LS00
U8B 74LS00
U8C 74LS00
U8D 74LS00
U9 74LS173
U10 74LS173
U14 74LS173
U19 74LS173
U11 NE5008
U13 NE5008
U12 AM6080
U15 4040
U16 74LS174
U18 74LS174
U17 74LS367
U20A 74LS74
U20B 74LS74
J? SIL6
P3 CONN_2
P4 CONN_2
Q1 NPN
D1 1N4148
D2 DIODE
D3 DIODE
D4 DIODE
C32 CPSMALL

File: MCMS Card2.sch
Sheet: /
Title: noname.sch
Size: A3
Date: 17 mar 2014
Rev:
KiCad E.D.A. eeschema (2012-01-19 BZR 3256)-stable
Id: 1/1